IRC:SP:104-2024

GUIDELINES FOR FABRICATION AND ERECTION OF STEEL BRIDGES

(First Revision)

INDIAN ROADS CONGRESS

2024

GUIDELINES FOR FABRICATION AND ERECTION OF STEEL BRIDGES

(First Revision)

Published by:

INDIAN ROADS CONGRESS

Kama Koti Marg,
Sector-6, R.K. Puram,
New Delhi-110 022

NOVEMBER, 2024

Price: ₹ 800/-
(Plus Packing & Postage)

GUIDELINES FOR FABRICATION AND ERECTION OF STEEL BRIDGES
(First Revision)

Authors' Name

Indian Roads Congress

Published by

Indian Roads Congress

Publisher's Address

Kama Koti Marg, Sector-6, R.K. Puram, New Delhi – 110 022

Printer's Details

P.P. Enterprises, New Delhi – 110 055

Edition Details

First Published: January, 2015

First Revision: November, 2024

(All Right Reserved. No Part of this publication shall be reproduced, translated or transmitted in any form or by any means without the permission of the Indian Roads Congress)

(510 Copies)

CONTENTS

S. No.	Description	Page No.
	Personnel of the Bridges Specifications and Standards Committee (BSS)	i - ii
1.	**INTRODUCTION**	1
2.	**FABRICATION**	**3**
2.1	General	3
2.2	Materials and Properties	3
2.3	Material Control	6
2.4	Storage and Handling of Materials	6
2.5	Workmanship and Quality Assurance Plan	7
2.6	Straightening and Flattening	7
2.7	Layout for Camber	7
2.8	Bending	8
2.9	Cutting and Edge Preparation	9
2.10.	Planning and Machining	9
2.11	Rivet and Bolt Holes	10
2.12	Bolted Construction	10
2.13	High Strength Friction Grip (HSFG) Bolted Connections	11
2.14	Riveted Construction	11
2.15	Welded Construction	12
2.16	Inspection and Testing for Fabrication & Assembly	23
2.17	Bearings	30
2.18	Painting nd Metalizing	30
3.	**ERECTION**	**32**
3.1	Transportation, Handling and Erection	32
3.2	Erection Scheme and Erection Procedure	33
3.3	Joints	36
	APPENDICES	**39**
	Appendix – A: Inspection Register	39
	Appendix – B: Manufacturing Tolerance	42
	Appendix – C: Welding Records	45
	Appendix – D: Symbols for Welding on Drawings	47

S. No.	Description	Page No.
	Appendix – E: Acceptance Levels of Welds	53
	Appendix – F: Procedure for Providing Plug Welds and Stud Welds	55
	Appendix – G: Welding Consumables	58
	Appendix – H: Weld Details	65
	Appendix – I: Non- Destructive Testing of Welds	76
	Appendix – J: HSFG Bolt and Installation Process	83
	Appendix – K: Painting System, Assessment and Measurement	92
	Appendix – L: Lifting Tools, Tackles and Suggested Methods	118
	Appendix – M: Utilization of Cranes and Safety	125
	Appendix – N: Erection Inspection Checklist	128

PERSONNEL OF THE BRIDGES SPECIFICATIONS AND STANDARDS COMMITTEE

(as on 25th September, 2022)

1	Nirmal, S.K. (Convenor)	Director General (Road Development) & Special Secretary to Govt. of India, Ministry of Road Transport and Highways
2	Prasad, P.V.V.S.S. Ravi (Co-Convenor)	Additional Director General, Ministry of Road Transport & Highways, New Delhi
3	(Vacant) (Member-Secretary)	The Chief Engineer (S&R), Ministry of Road Transport and Highways

Members

4	Ahmed, Ayaz	Chief Engineer, PWD, Uttarakhand
5	Bagish, Dr. B.P.	Chief Engineer, (Retd.), RCD Bihar
6	Balakrishna,Y	Additional Director General, Ministry of Road Transport & Highways
7	Banerjee, A.K.	Member (Retd), National Highway Authority of India
8	Basa, Ashok	Managing Director, CEM Engg & Consl (P) Ltd.
9	Dhiman, R.K., *VSM*	Chief Engineer (RBAT), Border Roads Organization
10	Gairola, Col. Pradeep	General Manager, NHIDCL
11	Garg, Sanjay	Chief Engineer, Ministry of Road Transport & Highways, New Delhi
12	Ghoshal, Amitabaha	Chief Advisor to Board, STUP (Retd.)
13	Goel, Dr. Rajeev	Chief Scientist, CSIR-CRRI, New Delhi
14	Heggade, V.N.	Former CEO of STUP & Former Executive Director of Gammon
15	Jaigopal, R.K.	Managing Director, Struct Geotech Research Laboratories (P) Ltd. Bengaluru
16	Jayachandran,Dr. Arul	Indian Institute of Technology, Chennai
17	Joshi, C.P.	Secretary (Retd.), PWD Maharashtra and OSD & IE, MSRDCL, Mumbai
18	Kumar, Dr. Ramancharla Pradeep	Indian Institute of Technology, Hyderabad
19	Kumar, Manoj	Member (Project), National Highways Authority of India
20	Kumar, Vikas	Managing Director, Delhi Metro Rail Corporation
21	Laskar, Prof. Aminul Islam	National Institute of Technology, Silchar
22	Meghwal, D.R.	Chief Engineer, NH & PP, PWD Rajasthan
23	Navghare, P.D.	Chief Engineer, PWD Maharashtra
24	Panday, I.K.	DG (RD) & SS (Retd.), Ministry of Road Transport and Highways
25	Pawar, Yogesh	Managing Director, UPSBC, Lucknow
26	Puri, S.K.	DG (RD) & SS (Retd.), Ministry of Road Transport and Highways
27	Roy, Dr. B.C.	Managing Director, RUPL & RUICP

28	Shankarlingam, C.	Adviser, L&T Limited, Chennai
29	Sharan,G	DG (RD) & SS (Retd.), Ministry of Road Transport and Highways
30	Sharma, R.S.	Managing Director, M/s Sugam Tech
31	Shivakumar, B.S.	Chief Engineer, KRDCL, Karnataka
32	Singh, Lt. Gen. Harpal PVSM, AVSM, VSM, ADC	Engineer-in-Chief, MES
33	Singh, Ranjit	Additional Director General, Central Public Works Department (Border)
34	Singh, Sanjay Kumar	Managing Director, BRPNL, Patna
35	Singla, S.P.	Managing Director, SP Singla Constructions Pvt. Ltd.
36	Sinha, N.K.	DG(RD)&SS (Retd), Ministry of Road Transport and Highways
37	Sinha, Prof. Ravi	Indian Institute of Technology, Mumbai
38	Srivastava, Rajesh K.	Executive Director, Lucknow RDSO
39	Tandon,Prof. Mahesh	Managing Director, Tandon Consultancy Pvt. Ltd.

Corresponding Members

1	Bhowmick, Alok	Managing Director, M/s BSEC Noida
2	Sinha, B.K.	Chief Engineer, Ministry of Road Transport and Highways
3	Subbarao, Dr. Harshavardhan	Chief Managing Director, M/s Construma Consultancy Pvt. Ltd.
4	Upadhyay, Prof. Akhil	Indian Institute of Technology, Roorkee
5	Yadav, Dr. V.K. *VSM*	Additional Director General (Retd.), Border Roads Organisation

Ex-Officio Members

1	President, Indian Roads Congress	(Joshi, C.P.), Secretary (Retd.), PWD Maharashtra and OSD & IE, MSRDCL, Mumbai
2	Director General (Road Development) & Special Secretary to Govt. of India	(Nirmal, S.K.), Ministry of Road Transport and Highways, New Delhi
3	Secretary General, Indian Roads Congress	(Nirmal, S.K.)

1 INTRODUCTION

The Guidelines for fabrication and Erection of steel bridges was first published in 2015 to cater the need to have some guidelines on the subject to refer as more and more steel bridges are being fabricated and erected for road use in our country.

As there have been considerable innovation in bridge erection technology over the years, the B-5 Committee in its tenure 2018 felt the need to revise the existing Guidelines incorporating the latest trends in fabrication and erection of steel bridges and accordingly, a sub group was formed comprising of Prof. Achyut Ghosh as Convenor & Shri Gyana.R. Mohanty, Shri Jaswant Arlekar, Shri B. Mazumdar & Dr. S.K. Garg as members to revise the draft initially. Accordingly, the revised draft was discussed in a number of meetings of both Sub Group and Main Committee and carried over in its another tenure 2021-2023 of B-5 Committee after its reconstitution and was approved in its meeting held on 17.01.2022 for placing before the BSS Committee.

The composition of the Steel and Composite Structures (B-5) Committee is given below:

Puri, S.K.	.....	Convenor
Nagpal, Prof. A.K.	.....	Co-Convenor
Gaharwar, Dr. S.S.	.....	Member-Secretary

Members

Arlekar, Jaswant
Bhowmick, Alok
Blah, W.
Biswas, Likhon
Garg, Dr. Rajeev Kumar
Garg, Dr. S.K.
Ghosh, Prof. Achyut
Guha, Arijit
Gupta, Vinay
Heggade, V.N.
Kapoor, Suresh
Karthik, V.
Kubasad, Gururaj
Malvankar, Sameer
Mohanty, Gyana R.
Ramaseshu, Prof D.
Sardeshmukh, V.D.
Shivakumar, B.S.
Singh, Ajay Kumar
Subbarao, Dr Harshavardhan

Corresponding Members

Ghoshal, A.
Lego, Dr. Atop
Roy, Dr. B.C.
Parameswaran, Dr. (Smt.) Lakshmy
Jayachandran, Dr. Arul

Ex-Officio Members

President, Indian Roads Congress	(Joshi, C.P.), Secretary (Retd.), PWD Maharashtra and OSD & IE, MSRDCL, Mumbai
Director General (Road Development) & Special Secretary to Govt. of India	(Nirmal, S.K.), Ministry of Road Transport & Highways
Secretary General, Indian Roads Congress	(Nirmal, S.K.)

The finalized draft guidelines was placed before the Bridges Specifications & Standards Committee (BSS) in its meeting held on 25th September, 2022 and was approved for placing before the Executive Committee & IRC Council for their consideration. After due deliberation on the draft guidelines, the Executive Committee in its meeting held on 7th October, 2022 approved the same for placing before the Council. The draft guidelines, after due deliberation was approved by the IRC Council in its 223rd Meeting held on 8th October, 2022 at Lucknow (Uttar Pradesh) for printing.

2 FABRICATION

2.1 General

Fabrication shall be carried out as per the drawings issued by the Engineer. Work should be executed as per the relevant 'IS Codes'. Safe working procedure should be adopted at all time of the work. Working procedures should be environment friendly. Proper care should be taken to handle and store the raw-materials, in process materials and fabricated materials, so that they are easily identifiable. Work should be carried out by qualified personnel. Stage inspection should be carried out for ensuring proper quality. Joining methodology for welding, bolting and riveting should be carried out as per the clauses of the relevant IS Codes or as specified in the drawing & subsequently accepted by the engineer as per the Quality Assurance Plan (QAP).

2.2 Materials and Properties

The material properties given in this clause are nominal values, as given by various IS Codes defining the material properties.

Structural Steel

All structural steel shall, before fabrication comply with the requirements of the latest revisions of the following Indian Standards:

i) IS: 808 Dimensions for Hot Rolled Steel Beam, Column, Channel and Angle Sections

ii) IS: 1161 Steel Tubes for Structural Purposes.

iii) IS: 1239(Part-1) Steel Tubes, Tubular and Other Wrought Steel Fitting Part-1 Steel Tubes.

iv) IS: 1239(Part-2) Steel Tubes, Tubular and Other Steel Fittings: Part-2 Steel Pipe Fittings.

v) IS: 1730 Dimensions for Steel Plates, Sheets, Strips and Flats for General Engineering Purposes.

vi) IS: 1732 Steel Bars, Round and Square for Structural and General Engineering Purposes.

vii) IS: 1852 Rolling and Cutting Tolerances for Hot Rolled Steel Products.

viii) IS: 2062 Hot Rolled Low Medium and High Strength Structural Steel Specification.

ix) IS: 4923 Hollow Steel Sections for Structural Use.

x) IS: 11587 Structural Weather Resistant Steels.

xi) IS: 12778 Hot-Rolled Parallel Flange Steel Sections for Beams, Columns and Bearing Piles.

xii)

Other Steels

Except where permitted with the specific approval of the authority, steels for machined parts and for uses in other than structural members or elements shall comply with the following or relevant Indian Standards:

i) IS: 1875 Carbon Steel Billets, Blooms, Slabs and Bars for Forgings.

ii) IS: 6911 Stainless Steel Plate, Sheet and Strip.

Casting and Forgings

Steel casting and forgings shall comply with the requirements of the following Indian Standards as appropriate:

i) IS: 1030 Carbon Steel Castings for General Engineering Purposes.

ii) IS: 1875 Carbon Steel Billets, Blooms, Slabs & Bars for Forgings.

iii) IS: 2004 Carbon Steel Forgings for General Engineering Purposes.

iv) IS: 2644 High Tensile Steel Castings.

v) IS: 2708 1.5% Manganese Steel Castings for General Engineering Purposes.

vi) IS: 4367 Alloy Steel Forgings for General Industrial Use.

Fasteners

Bolts, Nuts, Washers, and Rivets shall comply with the following or relevant IS standards, as appropriates:

i) IS: 1148 Steel Rivets Bars (Medium and High Tensile) for Structural Purposes.

ii) IS: 1149 High Tensile Steel Rivet Bars for Structural Purposes.

iii) IS: 1363(Part-1 to Part-3) Hexagon Heads Bolts, Screws, and Nuts of Products Grades-C (Size Range M 5 to M 64).

iv) IS: 1364(Part-1 to Part-3) Hexagon Heads Bolts, Screws & Nuts of Products Grades-A & B (Size Range M 1.6 to M 64).

v) IS: 1367 (Part-1 to Part-18) Technical Supply Conditions for Threaded Steel Fasteners.

vi) IS: 1929 Hot Forges Steel Rivets for Hot Closing (12 To 36 mm Diameter).

vii) IS: 2155 Cold Forges Solid Steel Rivets for Hot Closing (6 To 16 mm Diameter).

viii) IS: 3640 Hexagon Fit Bolts.

ix) IS: 4000 High Strength Bolts in Steel Structures – Code of Practice.

x) IS: 5369 General Requirements for Plain Washers & Lock Washers.

xi) IS: 5370 Plain Washes with Outside Dia 3 X Inside Dia.

xii) IS: 5372 Taper Washers for Channels (ISMC).

xiii) IS: 5374 Taper Washer for I Beams (ISMB).

xiv) IS: 5624 Foundation Bolts.

xv) IS: 6610 Heavy Washers for Steel Structures.

xvi) IS: 6623 High Strength Structural Nuts.

xvii) IS: 6649 Hardened and Tempered Washers for High Strength Structural Bolts and Nuts.

xvii) IS: 7002 Prevailing Torque Type Steel Hexagon Nuts.

Welding Consumables

Welding consumables shall comply with the following Indian Standards as appropriate:

i) IS: 814 Covered Electrodes for Manual Metal Arc Welding of Carbon and Carbon Manganese Steel.

ii) IS: 1395 Low and Medium Alloy, Steel Covered Electrodes for Manual Metal Arc Welding.

iii) IS: 3613 Acceptance Tests for Wire Flux Combination for Submerged Arc Welding.

iv) IS: 6419 Welding Rods and Bare Electrodes for Gas Shielded Arc Welding of Structural Steel.

v) IS: 6560 Molybdenum and Chromium – Molybdenum Low Allow Steel Welding Rods and Bare Electrodes for Gas Shielded Arc Welding.

vi) IS: 7280 Bare Wire Electrodes for Submerged Arc Welding of Structural Steels.

Welding

i) IS: 812 Glossary of Terms Relating to Welding and Cutting of Metals.

ii) IS: 816 Code of Practice for Use of Metal Arc Welding for General Construction in Mild Steel.

iii) IS: 822 Code of Procedure for Inspection of Welds.

iv) IS: 1024 Code of Practice for Use of Welding in Bridges and Structures Subject to Dynamic Loading.

v) IS: 1182 Recommended Practice for Radiographic Examination of Fusion Welded Butt Joints in Steel Plates.

vi) IS: 4853 Recommended Practice for Radiographic Inspection of Fusion Welded Butt Joints in Steel Pipes.

vii) IS: 5334 Code of Practice for Magnetic Particle Flaw Detection of Welds.

viii) IS: 7307(Part-1) Approval Tests for Welding Procedures: Part-1 Fusion Welding of Steel.

ix) IS: 7310 (Part-1) Approval Tests for Welders Working to Approved Welding Procedures: Part-1 Fusion Welding of Steels.

x) IS: 7318 (Part-1) Approval Test for Welders when Welding Procedure is not required: Part-1 Fusion Welding of Steel.

xi) IS: 9595 Recommendations For Metal Arc Welding of Carbon and Carbon Manganese Steels.

Wire Rope and Cables

These shall conform to the following or relevant Indian Standards except where use of other types is specifically permitted by the authority.

i) IS: 1785 (Part-1) Plain Hard-Drawn Steel Wire for Prestressed Concrete: Part-1 Cold Drawn Stress Relived Wire.

ii) IS: 1785 (Part-2) Plain Hard Drawn Steel Were for Prestressed Concrete: Part-2 as Drawn Wire.

iii) IS: 2266 Steel Wire Ropes and Strands for General Engineering Purposes.

iv) IS: 2315 Thimbles for Wire Ropes.

v) IS: 9282 Wire Ropes and Strands for Suspension Bridges.

2.3 Material Control

The structural steel to be used shall conform to IS: 2062 and of the respective grade along with the heat treatment process, as mentioned in the drawing.

All the steel sections used in the fabrication must have mill test certificate clearly indicating the specification to which the steel conforms.

All the cast mark numbers/heat mark numbers shall be recorded along with the numbers of the plate in a register, after receiving the steel in the fabrication shop and before starting the work.

The steel shall be used for fabrication after co-relation with Mill Test Certificate (MTC), received from the manufacturer, and test report from the test house.

IF desired / mentioned in the QAP, Sample test pieces from the steel of each cast mark shall be cut and sent for testing from an independent test house, approved by the engineer.

Any Steel, other than the quality mentioned in the QAP, has to be accepted by the Engineer before use.

Identification of the steel shall be as per the Quality Assurance Plan. The quantum of inspection and the number of samples, for co-relation, shall be agreed by the engineer and the record shall be maintained for his scrutiny.

While transferring the mark, hard stamping shall be carried out in those area that are allowed by the engineer.

2.4 Storage and Handling of Materials

Raw steel shall be stored free from dirt, foreign matter and shall be protected from corrosion and distortion. All materials and consumables, including raw steel, shall be stored specification wise and

size wise above the ground. The materials shall be stored on platforms, skids or on other supports. Floors shall have a light slope to allow proper drainage of water. Fabricated components shall be stacked neatly above ground with clear visibility of the match mark as shown in the part list. The electrodes shall be stored in dry & warm condition and in properly designed racks, specification wise. The bolts, nuts, washers and other fasteners shall be stored on racks above the ground in gunny bags and with protective oil coating. The paint shall be stored under cover in airtight container. Raw steel shall be handled by using lifting beam with proper slings in a manner so as to cause minimum damage or distortion of the plates and structural. Fabricated components shall be handled and stacked in a manner that is not subject to any deformation.

2.5 Workmanship and Quality Assurance Plan

QAP shall be prepared according to the nature of fabrication. QAP shall elaborate nodal points of checking and inspection during different stages of fabrication. This shall be submitted to the engineer for his approval. Fabrication shall be taken up after the approval of the QAP by the Engineer. All fabricated components shall carry mark number and the serial number. Method of marking shall be commensurate with the process of manufacturing and shall ensure retention of identity at all stages.

2.6 Straightening and Flattening

Steel materials such as plates and structural's shall have straight edges, flat surface and be free from twist. Straightening / flattening of the plates and structural's are required to be carried out for making good of deformation & distortion that may have occurred during rolling or handling operation. Structural sections can be straightened by presses, preferably hydraulic. Plates can be flattened by presses or straightener consisting of series of rollers. Pressure applied for straightening of flattening shall be such that is does not injure the material. Hammering shall not be permitted. Deformations caused at the time of handling can be removed by application of heat, hydraulic / gradually applied mechanical force.

Heating temperature shall not be more than 650^0 C. Heating and cooling rate shall be predetermined and applied to steel after consultation with the Engineer.

2.7 Layout for Camber

A full scale layout for the girder shall be done on a leveled bed and as per the drawing on the basis of nominal length of the members. Jigs for gussets and members shall be made from the layout. The position of the holes and their angular settings shall be as per the nominal layout. In case of small plate girders, where camber is not provided, the length of the members shall be taken from the drawing.

Long span of open web girders have provision of camber. The drawings show two diagrams. One is the diagram for nominal layout and the other is the camber diagram. A full scale layout for the girder shall be done on leveled bed, as per the diagram for nominal layout in the drawing. Jigs for gussets and members shall be made from the nominal layout. The position of the holes and their angular settings shall be as per the nominal layout. The length of the members shall be manufactured as per the corresponding length in the camber diagram. The machining of the ends shall be done to ensure proper contact of the members at the joints.

2.8 Bending

2.8.1 *Cold Bending*

Cold bending of steel having yield stress 360 MPa or more shall not be done. The bend plate orientation shall be done in a manner that the bend line shall be approximately perpendicular to the direction of rolling. Materials with non specified kinks or sharp bends, cracks, large dents or visible reductions of section (necking) shall not be used. Visual inspection of all the load points and for suspected damaged places, magnetic particle testing shall be done. For bend plates, the use of the largest bend radius that is permissible shall be ensured.

2.8.2 *Heating and Bending*

Heating shall be done before painting. The stresses due to preload (including loads induced by member weights) shall be limited to 0.5 f_y where f_y is the normal yield strength (y/s) of the materials. When jacks are used, the load shall be applied and locked off before applying heat. For heating, Orifice tip shall be fixed for neutral flame and its tip size shall be proportional to the thickness of the materials used. The heating torches shall be manipulated to guard against overheating. When V-shaped /straight regular heat patterns are used, the patterns shall be marked on the steel prior to heating. The steel shall be brought to planned heating temperature as rapidly as possible without overheating. Care shall be taken against buckling when thin or wide plates are heated. The temperature shall be monitored with temp. - sensitive crayons, pyrometer or infra-red non-contact thermometers. The temperature shall be measured within 5-10 seconds after the heating flame leaves the test area. Cooling of the steel with compressed air, passing through dryers for removing moisture, is permitted only after the steel has cooled below 315° C. Cooling shall not be done with water or mist.

Steel shall be allowed to cool below 120° C before applying another set of heating pattern.

For curving or cambering by V-shaped heating pattern, a location shall be re-heated after completion of three sets of heating patterns at adjoining locations. Application temperature shall be done under controlled procedure and not more than 650° C. Accelerated cooling shall not be done unless approved by the Engineer-in-Charge.

Material to be heated shall be properly supported. The material shall not yield before or during application of heat.

2.8.3 *Heat Curving of Bridge Member*

The procedure of application of heat shall be approved by the Engineer. Care should be taken to ensure that the stress due to pre-load does not exceed 0.5 f_y where f_y is the normal y/s of the material. Heat curving shall be done before attaching longitudinal stiffener. When Radius is more than 300 m for heat curving, preloading of the web shall be done prior to heating. When the web is heat curved in vertical position, sufficient support shall be given to avoid lateral deflection during heat curving process. The member should not over turn or twist. To prevent buckling and excessive local deformation, intermediate catch blocks should be maintained. Heating pattern shall be planned and applied along the length of the member to produce the specified curvature. Enough patterns shall be used to eliminate visually detectable chording effect. Heat curving shall not be done when

the radius of curvature is less than 300 m, flange thickness exceeds 75 mm or when the flange width exceeds 750 mm.

For rolled sections heat curving methods can be applied after taking approval of heating procedure from Engineer. It is not possible to give camber by heating in plate girders. Web should be cut to prescribed camber. Suitable allowance for shrinking due to cutting and welding should be provided.

2.9 Cutting and Edge Preparation

Edge preparation shall be done by anyone of the following prescribed methods for plate and Structural's.

Shearing, Cropping, Sawing, Flame Cutting with subsequent grinding.

Wherever possible, the edges shall be cut in shearing machine which will take the whole length of the plate in one cut. Sheared edges of plate shall be ground to a smooth profile for secondary use such as stiffeners & gussets. When used as stiffeners, they shall be ground so that the maximum gap is less than 0.2 mm in 60% of contact area.

Sawing can be effectively used for structural Steel.

2.9.1 *Flame Cutting*

Hardness of cut edge should not exceed 350 BHN after flame cutting. The material to be removed after flame cutting shall be to the extent of 2 mm or minimum necessary to ensure that the edge is less than 350 BHN hardness. When hardness increases beyond acceptable limit, even after material removal, the flame cut edge shall be heat-treated by the method approved by the Engineer for bringing the hardness to 350 BHN or less. It has to be ensured by dye penetration or magnetic particle test that cracks have not develop at the cut edges. All flame cut edges shall be ground to obtain reasonably clean, square & true edges. Drag lines produced by flame cutting shall be removed. Outside edge of plates and sections, which are prone to corrosion, shall be smoothened by grinding.

Use of flame cutting machine, having multiple oxy acetylene torches, is desirable for reducing the distortion due to cutting operation and for higher productivity. Plasma-arc-cutting method is preferable. This process offers less heat input and causes less distortion.

2.10 Planning and Machining

Machining of the edges or surface shall be carried out when specified in the drawings or where specifically instructed by the Engineer. Plates & Section up to a thickness of 12 mm shall be cut to a size 3 mm or more and in plates and sections exceeding 12 mm, a thickness of 6 mm or more than the finished size shall be cut for carrying out the finishing operations.

After completion of fabrication the butting ends of the members shall be smoothened by an end milling process to ensure uniform gap / proper contact as may be necessary. In the case of compression members the machined faces should be at right angle to the axis of the members and in contact as specified.

At the discretion of the Inspecting Officer, a tolerance of 0.4 mm may be permitted at isolated places on the butting line.

2.11 Rivet and Bolt Holes

Holes for rivets, black bolts, high strength bolts and countersunk bolts / rivets (Excluding close tolerance and turn fitted bolts) shall be either punched or drilled. The diameter of holes shall be 1.5 mm larger for bolts or rivets up to 25 mm Ø and 2 mm for bolt & rivets more than 25 mm Ø.

All holes shall be drilled except for secondary members such as, floor plate, handrails etc., and the members which do not carry the main load. The punching shall be done in materials whose yield stress, f_y does not exceed 360 MPa and thickness does not exceed (5600/f_y) mm.

When holes are required to be made in a pack of plates/ plates and structural's in material grade E250 (FE 410 w) with thickness more than 20 mm or grade E350 (FE440) with thickness more than 16 mm, the drilling shall be done up to a diameter which is 3 mm less than the required size of the hole. The under sized holes shall then be reamed to full diameter. The reaming of materials shall be done after assembly.

For bolts of close tolerance or turn fitted bolts, the diameter of the holes shall be upto + 0.15 mm to 0 mm, of the diameter of the bolt shank. The members to be connected with close tolerance or turn fitted bolts shall be firmly held together by service bolts, clamped and drilled through all thickness in one operation. The reaming to required size within the specified limit of accuracy, shall be done subsequently.

For HSFG joints, all holes shall be drilled after, removal of burrs. Where the number of plies in the grip does not exceed three, the diameters of holes shall be 2 mm larger than those of bolts. For more than three plies in grip, the diameters of hole in outer plies shall be as above and diameter of holes in inner plies shall be not less than 1.5 mm and not more than 3.0 mm larger than the bolt diameter, unless otherwise specified by Engineer.

2.12 Bolted Construction

All joint surfaces, for bolted connection, shall be free of scale, dirt, burrs, foreign material and all such defects that prevent solid seating of parts. The slope of surface of bolted parts in contact with bolt head & nuts shall not exceed 1:20, in the plane normal to bolts otherwise suitable tapered washer shall be used.

All fasteners shall have a washer under nut or bolt head, whichever is turned in tightening.

Each fastener of joint shall be tightened by hand wrenches / impact wrenches. Calibrated torque wrenches (manual /digital) shall be used for final tightening.

When turn of nut method is used for tightening the bolts in joint, first all bolts shall be brought to "snug tight" condition, (that is tightening by full effort of man using ordinary wrench or by few impacts of any impact wrench). All bolts in the joint shall then be tightened additionally by applicable amount of nut rotation specified in **Table 2.1** for guidance:

Table 2.1 Tightening the Bolts by Nut Rotation

Bolt Length (from Underside of Head to Edge)	Disposition of Outer Faces of Bolted Parts	
	Both Face Normal to Bolt Axis	One Face Normal to Bolt Axis & other Face Sloped Less than 1:20
Up to and including 4 x dia	1/3 turn	1/2 turn
Over 4 x dia but less than 8 dia	1/2 turn	2/3 turn
Over 8 x dia but less than 12 x dia	2/3 turn	5/6 turn

2.13 High Strength Friction Grip (HSFG) Bolted Connections

The various requirement of chemical and physical properties of bolts nuts and washers shall be as per relevant IS specifications unless otherwise mentioned in the drawing or required by the Engineer. Bolted connections of joints using high tensile friction grip bolts shall comply with requirements mentioned in IS: 4000 High Strength Bolts in Steel Structures-Code of Practice.

Reference should be made to **Appendix-J** for selection, usage, installation and testing procedures.

2.14 Riveted Construction

Assembled riveted joint surfaces including those adjacent to the rivet head shall be free of scale, dirt, loose scale, burrs, other foreign material and defects that would prevent solid seating of parts.

The part / members to be riveted shall be firmly drawn together with bolts, so that the sections riveted are in close contact throughout. Every third hole of the joint shall have assembly bolts till riveted. Drift shall be used only for matching of holes of the parts / members but not to the extent as to distort the holes.

While riveting built up members, great care should be taken to ensure that the set of holes for field rivets in each flange of the built up member, is aligned dead-square in relation to that in the other flange and not abrogated. Use of assembly fixture shall be made to ensure this drift of larger size than the diameter of the drilled holes shall not be used.

Rivets shall be heated uniformly to a "light cherry red color" between 650° C to 700° C for hydraulic riveting and "orange color" for pneumatic riveting of mild steel rivets. High tensile steel rivets shall be heated up to 1100° C. The head of the rivet, particularly in long rivets, shall be heated more than the point. Sparking or burnt rivets shall not be used.

Rivet shall be driven in hole when hot so as to fill the hole as completely as possible and shall be of sufficient length to form a head of the standard dimension. When countersunk head is required the head shall fill the countersunk hole. Projection after countersinking shall be ground off where necessary.

The riveting shall be done by hydraulic or pneumatic machine unless otherwise specified by Engineer. The head can be held by pneumatic holding device. Where, it is impossible to back up by normal method of holding up, double gunning method may be resorted to. The working pressure to be applied, when using pneumatic or hydraulic tools, shall be approved by the engineer.

Any rivet due to defect in head size or head driven off the centre shall be removed and replaced. The method of removal of the defective rivet shall ensure that, the members of the joint are not damaged in the process.

The parts not riveted in the shop shall be secured by bolts to prevent damage during transportation and handling.

2.15 Welded Construction

2.15.1 *General*

Over welding is a common defect in fabrication industry. Excessive welding does not necessarily increase the strength of a welded joint. On the contrary, it increases the stresses in a highly restrained joint. There are many criteria for the selection of an edge preparation and they are:

i) Ease of Assembly.
ii) Resistance to lamellar tearing.
iii) Weld inspection by radiography, ultrasonic etc., testing methods.

The joint preparation must be designed.

i) To allow full approach of electrode.
ii) To have minimum deposition of weld metal.
iii) To have access for welding and inspection.
iv) To be linked to the welding process.

2.15.2 *Weldability of Steel*

The weldability of steel depends on its susceptibility to cracking during and after welding. The amount of carbon in the metal has a considerable influence on the weld ability of structural steel. The weldability is expressed by Carbon Equivalent (CE) of the material based on ladle analysis. The CE is determined from the following expressions:

$$CE = C + \frac{Mn}{6} + \frac{Cr + Mo + V}{5} + \frac{Ni + Cu}{15}$$

The lower the CE better is the weldability. For general structural steel, the CE value should preferably be not more than 0.45 to ensure good weldability. Steel with higher CE are also weldable with special electrodes, weld designs and procedures. Though CE does not take into account. Sulphur and Phosphorus, the presence of more than 0.06% of each these constituents will have deleterious effect on welding.

If the Carbon Equivalent exceeds a particular limit, there exist a possibility of cracking in the heat-affected zone (HAZ). Hard, brittle martensite, cracks are likely to develop. This phenomenon is called under bead cracking. The high thermal cycles accelerate the formation of HAZ cracking. Presence of hydrogen in the weld is another potential factor in the formation of under bead cracking. The principal factors governing the risk of HAZ cracking in steel are:

i) Compatibility of weld metal composition with parent metal.
ii) Preheat temperature according to CE (carbon equivalent) and thickness.
iii) Hydrogen content in the form of ingredients in the flux.
iv) Cooling rate (heat input, joint type, thickness).

Table 2.2 shows the recommended preheat and inter pass temperature for different type of structural steel.

Table 2.2 Recommended Pre-Heat and Interpass Temperature

Steel Type	Welding Process	Thickness of Thickest Part of Welding (mm)	Temp ^{0}C (Min)
Mild steel with some restriction	Manual metal arc with electrodes other than low hydrogen type	Up to 19 incl. 19 to 38 incl. 38 to 64 incl. Over 64	None 66 107 150
Mild & Medium Tensile steel	Manual metal arc with electrodes of low hydrogen type, submerged-arc, flux cored wire	Up to 19 incl. 19 to 38 incl. 38 to 64 incl. Over 64	None 10 66 107
Higher tensile as-rolled or normalized steel	Manual metal arc with electrodes of low hydrogen type, Submerged-arc, Flux cored wire	Up to 19 incl. 19 to 38 incl. 38 to 64 incl. Over 64	10 66 107 150

2.15.3 *Welding Procedure Sheet*

The symbols for welding used on the drawings and procedure sheets shall be in accordance with IS: 812 & IS: 813. If other symbols are used, a complete explanation of their meaning is given **Appendix-D**.

The welding procedure sheets prepared for direction of the welding shall include the following information:

i) Specification of the Parent metal, Electrodes, Wires and / or wire-flux combination.
ii) Locations, sizes, actual lengths and details, i.e. form of joint, angle between fusion faces, gap between parts, etc., of all welds.
iii) Whether welds are to be made in shop or field.
iv) Current, voltage & other relevant parameters.
v) Welding procedure, like welding sequence, pre-heating, post-heating etc.
vi) Details of testing and inspection requirements.

2.15.4 *Welding Processes*

Generally Manual Metal Arc-Welding, Submerged-Arc Welding, (Automatic & Semi-Automatic) Gas shielded Arc Welding etc., are used in bridge fabrication.

The various types of welds are Fillet, Butt, Plug, Spot & Seam welds. The two most popular types of welding for structural purpose are fillet and butt joints.

2.15.5 *Fusion Faces*

The preparation of fusion faces, angle of preparation root radius and root face shall be as specified in IS: 9595 and IS: 4353. Where the gap between the root faces of a butt joint is excessive, the gap shall not be bridged since this procedure often leads to cracking. The fusion faces of the joint shall be built-up with weld metal to give the appropriate gap before the weld proper is commenced.

The preparation of fusion faces, angle of bevel, root radius and root face shall be such that the limits of accuracy required by the appropriate application standard can be achieved. When however, no appropriate application standard exists and this guideline is itself to be used, it is recommended that, for manual welding, the tolerances on limits of gap and root face should be ±1 mm on the specified dimensions for material up to and including 12 mm thick and ±2 mm for material over 12 mm thick. The tolerance on the included angle between the fusion faces of a V preparation is recommended to be ±5 degree and for U and J preparations + 10 degree. For an automatic process, closer limits are necessary and particular requirements depend on the characteristics of the process.

It shall be ensured, if necessary, by suitable non-destructive tests that the fusion faces and adjacent surfaces shall be free from cracks, notches or other irregularities which might be the cause of defects or would interfere with the deposition of the weld.

Fusion faces and the surrounding surfaces shall be free from heavy scale, moisture, oil, paint or any other substance which might affect the quality of the weld or impede the progress of welding. Certain proprietary protective coatings are specially formulated with the intention that they should not interfere with welding. The use of such coatings is not excluded by the requirements of this clause but shall be demonstrated by means of specimen welds that the coating complies with the above requirements.

2.15.6 *Assembly for Welding*

Parts to be welded shall be assembled such that the joints are easily accessible and visible to the operator. Jigs and manipulators shall be used, where practicable, so that the welding can be carried out in the most suitable position. Jigs shall maintain the alignment with the minimum restraint so as to reduce the possibility of locked in-stress.

2.15.7 *Structural Details*

Changes in section shall be gradual and notch-like corners shall be avoided. Attachment of fittings and making openings at locations of severe fatigue stress shall preferably be avoided.

Packing's - Where a packing is used between two parts, the packing and the welds connecting it to each part shall be capable of transmitting the load between the parts, except where the packing is

too thin to carry the load or permit the provision of adequate welds, when it shall be trimmed flush with the edges of the narrower part and the load shall be transmitted through the welds alone, the welds being increased in size by an amount equal to the thickness of the packing.

2.15.8 *Arrangement of Welds*

Fillet welds at right angles to the lines of principal stresses in a plate subjected to tension shall be avoided in dynamically loaded structures.

Accumulation of weld joints in a single location shall be avoided, **Appendix H, Fig. H-20.** Sizes or lengths of fillet welds shall be sufficient to provide for better distribution of stress. Excessive sizes or lengths shall not be specified.

2.15.9 *Safety Precautions*

Provisions of IS: 818, IS: 1179 and IS: 3016 shall generally apply for safety and health requirements during welding operations.

2.15.10 *Approval and Testing of Welding Procedures*

Welding procedure test shall be carried out in accordance with IS: 7307(Part-1) to demonstrate, by means of a specimen weld of adequate length on a steel representative of that to be used, so as to confirm that satisfactory weld is achievable with the welding procedure to be used for fabrication.

Provisions of IS: 9595 and IS: 4353, shall generally be followed, as applicable, for welding procedure, details of workmanship, correction of weld faults, penning, painting, etc. In case any of the provisions contained therein contravene the provisions made in this guideline, the code shall be followed.

In addition to the provisions of IS: 4353 the Inspector may, where deemed necessary, require a sample joint having the same cross-section as the joint to be used in construction and a length of at least 300 mm to be welded with the wire, flux current, arc voltage and speed of travel that are proposed to be used and a macro etched cross section of the welded joint prepared as a demonstration that the specified requirements will be met, when the welding current, arc voltage and speed of travel are established by a test made in accordance with requirements of this clause, they shall be kept within the following limits of variations:

Welding current	±10%
Arc Voltage	± 7%
Speed of travel	±15%

Before carrying out the tests, the Inspector shall check the calibration of the welding equipment so that the parameters such as voltage, current, wire feed, trolley speed, as indicated by the equipment, are correct.

2.15.11 *Approval and Testing of Welders*

The welders shall be trained in accordance with IS: 817. The welders shall be subjected to appropriate qualifying tests specified in IS: 7310 (Part-1).

2.15.12 *Welding Procedures*

Welding work shall be given to an agency who does produce satisfactory evidence of his ability to handle the work in a competent manner. The agency shall also prove the ability of the operator/ welders employed by him to produce welds of the required strength & quality. The agency shall employ a competent welding supervisor to ensure that quality of materials and the standard of workmanship comply with the requirements laid down in this code.

The sizes and length of welds shall not be less than those specified in the drawings nor shall they be substantially in excess of the requirements without prior approval of the Engineer. The location of welds shall not be changed without prior approval of the Engineer. Welds shall preferably be made in flat position.

In case of welds in structures subjected to dynamic loading, adequate means of identification, either by identification stamp or other records shall be provided to enable each weld to be traced to the welding operator by whom it was made.

During the cooling of the weld the joints shall not be subjected to any external forces or shocks.

Freedom of movement of one member of a joint shall be allowed wherever possible. No butt joint shall be welded without allowing one component, freedom of movement of the order of 1.5 mm.

In making welds under conditions of severe external shrinkage restraint, the welding shall be carried out with electrodes having type 6 covering as per IS: 814.

In case of welding using direct current, earthing on the work piece to be welded shall be connected carefully at more than one location with a view to avoid "Arc Blow" during welding.

All welds should be done by submerged arc welding process either fully automatic or semi-automatic. Carbon Dioxide (CO_2) welding or manual metal arc welding may be done only for welds of very short runs or of minor importance or where access of the locations of weld does not permit automatic or semi-automatic welding.

Neither the depth of fusion nor the maximum width in the cross section of weld metal deposited in each weld pass shall exceed the width of the face of the weld pass. **(Appendix-H, Fig. H-21 & H-22)**

2.15.13 *Sequence of Welding*

The sequence of welding shall be such that, when possible, the members, which offer the greatest resistance to compression, are welded first.

The welding in the thinnest element of a section (usually the web in case of beams) shall be done prior to the welding of the thicker elements (usually the flanges in case of beams).

In making butt welded joints in rolled shapes, the sequence and procedure of welding shall take into account unequal amount of expansion or contraction in elements being welded.

Splices in each component part of a solid web girder or built-up member shall be made before such component part is welded to other component part of the member.

2.15.14 *Position of Welding*

For fabrication of steel bridge girders the following positions of welding shall be adopted.

i) Flat and horizontal position for Submerged Arc Welding (SAW).
ii) Horizontal or horizontal-vertical position for welding done using Manual Metal Arc Welding (MMAW) or CO_2 Welding.

Note: *Different positions have been shown diagrammatically in* ***Fig. H-23. (Appendix-H).***

All butt welds by the submerged arc process shall be made in the flat position. Fillet welds may be made in either flat or horizontal-vertical position. The size of the single pass fillet welds made in the horizontal-vertical position shall not exceed 8 mm.

2.15.15 *Tack Welds*

Tack welds shall be not less than the throat thickness or leg length of the root run to be used in the joint. The length of the tack weld shall not be less than four times the thickness of the thicker part or 50 mm whichever is the smaller.

Where a tack weld is incorporated in a welded joint, the shape, size and quality shall be suitable for incorporation in the finished weld and it shall be free from all cracks and other welding defects. Tack welds, which are prone to cracking, shall be cut out and re welded.

Tack welds shall not be made at extreme ends of joints.

2.15.16 *Inter-Run Cleaning*

Each run of weld bead shall be thoroughly cleaned to remove particles of slag, spatters, etc. before the subsequent bead is super-imposed during multi-pass welding. Similarly, each layer of weld should be thoroughly cleaned of slag, spatters, etc, before depositing subsequent layers of weld with particular reference to thorough cleaning of toes of the welds. Visible defects, such as cracks, cavities and other deposition faults, if any, shall be removed to sound metal before depositing sub-sequent run or layer of weld.

2.15.17 *Stray Arcing on Work*

Stray Arcing shall be avoided as this can leave local hard spots or cracking which are to be removed by mechanical means and be checked by inspection depending upon the application.

2.15.18 *Butt Welding*

a) Forms and details- All details of butt welded joints shall be in accordance with IS: 9595 and IS: 4353 as applicable.
b) Unsealed butt welds of single V, U, J and bevel types and incomplete penetration butt welds shall not be used. Sketches of different types of butt weld are given in **(Appendix-H, Fig. H-1).**
c) Intermittent butt welds shall not be used.

Sealing or Backing

a) Single V, U, J bevel or square butt welds shall generally be completed by depositing a sealing run of weld metal on the back of the joints.

b) Where it is not practicable to deposit a run of weld metal on the back of the joint, then single V, bevel or square butt welds, welded from one side only, may be permitted, provided that another steel part of the structure or a special steel backing strip is in contact with the back of the joint and the edges of the steel parts of the joint are prepared as specified in IS: 9595 or IS: 4353, whichever is applicable, to ensure complete fusion of the parts to be joined.

c) In all full penetration butt welds which are to be welded from both sides, the back of the first run shall be gouged out by suitable means to clean sound metal, before welding is started on the gouged out side **(Appendix-H, Fig. H-2)**.

Butt Welding Parts of Unequal Cross-Section

a) In butt welding steel parts in line with each other which are intended to withstand dynamic forces and which are of unequal width, or where the difference in thickness of the parts exceeds 25% of the thickness of the thinner part or 3 mm whichever is greater, the dimensions of the wider or thicker parts shall be reduced at the butt joints to those of the smaller part, the slope being not steeper than 1 in 5 **(Appendix-H, Fig. H-3)**. Where the difference in thickness of the parts does not exceed 25% of the thickness of the thinner part or 3 mm whichever is greater, the transition of thickness shall be accomplished by sloping weld faces **(Appendix-H, Fig. H-4)** by chamfering the thicker part or by combination of the two methods **(Appendix-H, Fig. H-5)**, at an angle not steeper than 1 in 5.

b) Where the reduction of the dimensions of the thicker part is impracticable, and/or where structures are not designed to withstand dynamic forces, the weld metal shall be built up at the junction with the thicker part to dimension at least 25% greater than those of the thinner part, or alternatively, to the dimensions of the thicker member **(Appendix-H, Fig. H-6)**.

Butt Welded T Joints – Butt weld in T joint shall be reinforced by welding as shown in **(Appendix-H, Fig. H-7)** Flange to web connection will also fall under this category.

Ends of Butt Welds – The ends of butt joint shall be welded so as to provide the full throat thickness. This shall be done, in all cases of parent metal more than 20 mm thick and preferably in other cases also, by extending the ends of the butt welds past the edges of the parts joined by the use of run-on and run-off plates with a similar joint preparation and of reasonable thickness not less than the thickness of the part joined and of the length not less than 40 mm **(Appendix-H, Fig. H-8)** If run on and run off plates are removed after completion of the welds, the ends of the weld shall be finished smooth and flush with the edges of the abutting parts. Run on and run off plates are to be removed after completion of welds by abrasive cut off or by hacksaw blade. To avoid thermal stress as well as heat affected zone, Oxy-acetylene cut snould not be permitted. If the parent metal is not more

than 20 mm thick, the ends of the butt welds may be chipped or cut back to sound metal and then filled up with welds having a width not less than one and half time the 'V' opening and having the same reinforcement as adopted for the faces of the butt weld **(Appendix-H, Fig. H-9)**

Reinforcement of Butt Welds - Sufficient convexity not exceeding 3 mm, shall be provided as reinforcement to ensure full cross-sectional area at the joint. Where a flush surface is required, the butt welds shall be first built up as specified above and then dressed flush.

2.15.19 *Fillet Weld*

Types of Fillet Welds

Normal Fillet Weld – A normal fillet weld is one in which the depth of penetration beyond the root is less than 2.4 mm **(Appendix-H, Fig. H-10)**.

Deep Penetration Fillet Weld – A deep penetration fillet weld is one in which the depth of penetration beyond the root is 2.4 mm or more **(Appendix-H, Fig. H-10)**. It shall be used only by agreement between engineer and contractor, and tests shall be agreed between engineer and contractor to verify that the requisite route penetration is being obtained.

The size of normal fillet weld shall be taken as the minimum leg length **(Appendix-H, Fig. H-11)**. The size of a deep penetration fillet weld shall be taken as the minimum nominal leg length plus 2.4 mm **(Appendix-H, Fig. H-12)** The minimum size of the first run or of a single run fillet welds shall be as given in **Table 2.3**. Minimum size of fillet weld shall be as given in **Table 2.4** to avoid the risk of cracking in the absence of pre-heating.

Table 2.3 Minimum Size of First Run or of a Single Fillet Weld

Thickness of Thicker Part	Minimum Size
6 mm up to and including 20 mm	5 mm
Over 20 mm up to and including 32 mm	6 mm
Over 32 mm up to and including 50 mm	8 mm

Table 2.4 Minimum Size of Fillet Weld

Thickness of Thicker Part	Minimum Size
Up to and including 6 mm	3 mm
Over 6 mm up to and including 12 mm	4 mm
Over 12 mm up to and including 18 mm	6 mm
Over 18 mm up to and including 36 mm	8 mm
Over 36 mm up to and including 56 mm	10 mm
Over 56 mm up to and including 150 mm	12 mm
Over 150 mm	16 mm

Note *1. When the minimum size of the first run of fillet weld and /or minimum size of the fillet weld as given in Table 2.3 and Table 2.4 is greater than the thickness of the thinner part, the minimum size of the weld shall be equal to the thickness of the thinner part. The thicker part shall be adequately pre-heated to prevent cracking of the weld.*

2. Where the thicker part is more than 50 mm in case of steel to IS: 2062 special precautions like pre-heating as per IS: 9595 shall be taken to ensure weld soundness.

Effective Throat Thickness - The effective throat thickness of a fillet weld shall be taken as 'K' times fillet size where 'K' is a constant, given in as per **(Appendix-H, Fig. H-13)**, for different angles between fusion faces. All fillet welds shall have a flat or convex face. In no case, except at the outside of a corner joint shall the convexity exceed the value given by the formula 0.1S + 0.76 mm, where S is size of weld in mm.

Angle Between Fusion Faces - Fillet weld shall not be used for connecting parts, whose fusion faces form an angle of more than 1200 or less than 600, unless such welds are demonstrated by practical tests to develop the required strength.

Effective Length – The effective length of fillet weld shall be that length only, which is of the specified size and required throat thickness. It shall be taken to be the actual length of the weld minus twice the weld size. This deduction need not be made in the case of end and side fillets, which are returned continuously around the corner for a minimum length of twice the weld size.

Effective Area – The effective length of a fillet weld designed to transmit loading shall not be less than four times the size of the weld, subject to minimum of 40 mm.

Minimum Length – The effective length of a fillet weld designed to transmit loading shall not be less than four times the size of the weld, subject to minimum of 40 mm.

2.15.20 *Intermittent Fillet Welds*

Intermittent fillet welds may be used in structures not subjected to dynamic loading, to transfer calculated stress across a joint when the strength required is less than that developed by a continuous fillet weld of the smallest allowable size for the thickness of the parts joined.

Load carrying intermittent fillet welds shall not be used in members subjected to dynamic loading, except for connecting intermediate stiffeners to webs of beams and girders, subject to the provisions of such connections as stipulated.

Intermittent fillet welds shall not be used where they would result in the formation of rust pockets.

Chain intermittent welding is to be preferred to stagger intermittent welding.

The distance along an edge of a part between effective lengths of consecutive intermittent fillet welds, whether the welds are in line or staggered on alternate sides of the edge, shall not exceed 12 times the thickness of the thinner part and shall in no case exceed 150 mm.

In a line of intermittent fillet welds, there shall be a weld at both ends of the parts connected. For staggered welds, this shall apply to both sides.

In built up members in whose parts are connected by intermittent filled welds, continuous longitudinal fillet welds shall be used at the end for a length not less than the width of the part concerned.

2.15.21 *Fillet Welds Applied to the Edge of a Plate or Section*

Where a fillet weld is applied to the square edge of a part, the specified size of the weld shall generally be at least 1.5 mm less than the edge thickness, in order to avoid melting down of the outer corner, **(Appendix-H, Fig. H-14)**.

Where a fillet welds is applied to the rounded toe of a rolled section, the specified size of the weld shall generally not exceed 3/4 of the thickness of the section at the toe **(Appendix-H, Fig. H-14)**.

Where a fillet weld equal in size to the thickness of the section at the toe of a rolled section or at the square edge of a plate is required from design considerations and is specially designated in the drawing, the toe or edge shall be specially built up with weld metal in such a manner as to ensure full throat thickness, full fusion area and no injury to the parent metal **(Appendix-H, Fig. H-15 & H-16)**.

End Fillets - When end fillets are used alone, each fillet shall be returned as a side fillet for a minimum length equal to twice the size of the weld, and this returned length shall be disregarded in calculating the strength of the joint.

2.15.22 *Fillet Welds in Slots or Holes*

When welding inside a slot or a hole, in a plate or other part, in order to join the same to an underlying part, fillet welding may be used along the wall or walls of the slot or the hole, but the latter shall not be filled with weld metal or partially filled in such a manner as not to form a direct weld metal connection between opposite wall.

The dimensions of the slot or hole shall comply with the following limits in terms of the thickness of the steel part in which the slot or hole is formed.

i) The width or diameter to be not less than three times the thickness or 25 mm whichever is greater.
ii) Corners at the enclosed ends of slots to be rounded with a radius not less than 1.5 times the thickness or 12 mm whichever is greater.
iii) The distance between the edge of the part and edge of the slot or hole or between adjacent slots and/ or holes not to be less than twice the thickness when measured along the direction of stress and five times the thickness when measured normal to the direction of stress.

End Returns - Fillet welds terminating at the ends or sides of parts or members shall be returned continuously around the corner for a distance of not less than twice the size of the weld. This provision shall apply particularly to side and end fillet welds joining brackets, beam seating's and similar attachments at the tension side of such connections.

Bending about a single fillet - A single fillet weld shall not be subjected to bending moment about the longitudinal axis of the fillet **(Appendix-H, Fig. H-17)**.

2.15.23 *Lap Joints*

The minimum overlap of parts in stress carrying lap joints shall be four times the thickness of the thinner part. Unless opening out of the parts is prevented, they shall be connected by at least two transverse or two longitudinal fillet welds **(Appendix-H, Fig. H-18)**.

If longitudinal fillet welds are used alone in lap joints of end connections, the length of each fillet weld shall be not less than the perpendicular distance between them. The transverse spacing of longitudinal fillet welds used in end connections shall not exceed sixteen times the thickness of the

thinner part connected. The longitudinal fillet welds may be in slots in addition to those along the edges, to comply with this provision.

2.15.24 *Plug Weld*

Plug welds shall not normally be provided and in any case shall not be designed to carry stresses. Where unavoidable, the procedure laid down in **Appendix-F** shall be followed.

2.15.25 *Combination of Welds*

If butt and fillet welds are combined in a single joint, the allowable capacity of each shall be separately computed with reference to the axis of the group in order to determine the allowable capacity of the combination.

Butt welds in parts or members, subjected to dynamic loading, shall not be supplemented by splice plates attached by fillet welds.

2.15.26 *Welding of Stud Shear Connectors*

i) The stud shear connectors shall be welded in accordance with the instruction of the manufacturer of the stud welding machine including preheating.
ii) The stud and the surface to which studs are welded shall be free from scale, moisture, rust and other foreign material. The stud base shall not be painted, galvanized or chrome-plated prior to welding.
iii) Welding shall not be carried out when temperature is below 0° C or surface is wet.
iv) The welds shall be visually free from cracks and lack of fusion and be capable of developing at least the nominal ultimate strength of studs.
v) The procedural trial for welding the stud shall be carried out when specified by Engineer.

2.15.27 *Stress Relieving and Peening*

The members which are indicated in the contract or specified by Engineer, to be annealed or stress relieved shall have finish machining, boring etc. done subsequent to heat treatment. The stress relief treatment shall conform to the following unless specified by Engineer.

i) The temperature of the furnace shall not be more than 300° C at the time welded assembly is placed in.
ii) The rate of heating shall not be more than 220° C per hour divided by max metal thickness subject to max. 220°C per hour.
iii) After max. temperature of 600°C is reached, the assembly shall be held within specified limit of time based on weld thickness. The temperature shall be maintained uniformly throughout the furnace during holding period such that temperature at no two points on the member will differ by more than 80°C.
iv) The cooling shall be done in closed furnace when temperature is above 300°C at the maximum rate of 260° C per hour divided by maximum metal thickness. The local stress relieving shall be carried out in specified procedure and approved by Engineer.

Peening of weld shall be carried out wherever specified by Engineer.

i) If specified, peening may be done on each weld layer, except the first run.
ii) The peening shall be carried out after weld has cooled by light blows from a hammer, using a round nose tool. Care shall be taken to prevent scaling or flecking of weld and base met-al from over peening.

2.15.28 *Cope Holes*

Cope hole is a semicircular notch in between web plate and flange plate to disconnect junction of welds **(Appendix-H, Fig. H-19)**.

Provision of cope hole in welded girders is not required when the following conditions are satisfied:

i) Butt welds in flanges and web are made by automatic sub-merged arc welding prior to assembling web and flanges together,
ii) Weld reinforcement is dressed flush both at top and bottom by grinding / machining and
iii) Weld is tested by radiographic / ultrasonic method.

2.16 Inspection and Testing for Fabrication & Assembly

2.16.1 *General*

No protective treatment shall be applied to the work until the appropriate Inspection & testing has been carried out. The stage inspection shall be carried out for all operations so as to ensure the quality and correctness of fabrication. An Inspection Register **(Appendix-A)** should be maintained throughout the fabrication process.

2.16.2 *Testing of Material*

Structural steel shall be tested for mechanical and chemical properties as per various Indian Standards as may be applicable and shall confirm to requirements specified in IS: 2062

Rivets, bolts, nuts, washers, 'welding consumables, steel forging, casting and stainless steel shall be tested for mechanical and chemical properties as applicable and shall conform to requirements, as specified in the appropriate Indian Standard.

Rolling and cutting tolerance shall be as per IS: 1852. The thickness tolerance check measurements for the plates and rolled sections shall be taken at not less than 15 mm from edge.

Ultrasonic test shall be mandatory for plates of thickness of 25 mm and above for checking defects like laminations etc. The testing grid shall be 150 mm x 150 mm, preferably, or as per the instruction of the engineer. Flame cut edges without visual signs of laminations need not be tested for unless specifically suggested by the engineer.

Steelwork shall be inspected for surface defects and exposed edge laminations during fabrication and blast cleaning. Significant edge laminations found, shall be reported to Engineer for his decision.

Ultrasonic testing shall be used to determine depth of imperfection. For dynamically loaded structures recommended criteria for allowable discontinuities for edge defects and the repair

procedure shall be as given in **Table 2.5**, until and unless specified otherwise. The weld procedure shall be as per the requirement of the material being used.

Table 2.5 Discontinuities for Edge Defects and Repair Procedure

Sl. No.	Discontinuity	Repairs Required
1	Discontinuities of 3 mm in max. depth, any length for material thickness up to 200 mm.	None
2	Discontinuities of 3 mm to 6 mm in depth and over 25 mm in length for thickness up to 100 mm and 6 mm to 12 mm depth, over 50 mm in length for thickness 100 mm to 200 mm.	Remove. Need not be welded.
3	Discontinuities of 6 mm to 25 mm in depth, over 25 mm in length for thickness up to 100 mm. and 12 mm to 25 mm in depth, over 25 mm in length for thickness over 100 to 200 mm.	Remove and weld. No single repair shall exceed 20% of edge being repaired.
4	Discontinuities over 25 mm in depth, any length for thickness 100 to 200 mm.	With approval of Engineer remove to depth of 25 mm and repair by weld
5	On edges cut in fabrication, discontinuities of 12 mm maximum depth any length	None

2.16.3 *Measurement of Curvature and Camber*

Horizontal curvature and vertical camber shall not be measured for final acceptance before completion of welding and heating operations and cooling down of the job. Horizontal curvature shall be checked with girder in the vertical position by measuring offsets from a string line or wire attached to both flanges or by any other suitable means.

Camber shall be checked by Piano wire, Leveling instrument or any other the method by taking vertical offsets with reference to the end of girders or as specified by the engineer and the drawing.

2.16.4 *Tolerance for Drilled and Reamed Holes*

Acceptable deviation in holes drilled and reamed for mild steel and high strength rivets, bolts of normal accuracy and also for high strength friction grip bolts shall be as per appropriate Indian Standard IS: 4000.

2.16.5 *Bolted Connections*

Bolted connection joints with black bolts and high strength bolts shall be inspected for compliance of requirements as per relevant IS codes.

The Engineer shall observe the installation and tightening procedure of the bolts. Inspection for initial snug tightening and in final tightening shall be carried out.

The tightness of bolts in connection shall be checked by calibrated torque wrench.

Tightness of 10% bolts, but not less than two bolts, selected at random in each connection shall be checked by calibrated torque wrench. If no nut or bolt head is turned by this application connection can be accepted as properly tightened, but if any nut or head has turned, all bolts shall be checked and retightened.

Bolts, and bolted connection joints with high strength friction grip bolts shall be inspected and tested according to IS: 4000 / IRC:24 "Standard Specifications and Code of Practice for Road Bridges, Steel Road Bridges (Limit State Method)".

Checks after Second Stage Tightening: After the second stage of tightening, following shall be checked

i) 100% bolts shall be checked and certified to have been turned through the requisite amount by verifying the permanent marks on the nut and the bolt.
ii) 1% of the bolts, subject to minimum of 10 per size of bolts shall be checked for gross under-tightening as per procedure given in **Annexure-D** of IS: 4000.

2.16.6 *Riveted Connections*

Rivets and riveted connection shall be inspected and tested for compliance.

The firmness of the joint shall be checked by 0.2 mm filler gauge, which shall not go inside under the rivet head by more than 3 mm. There shall not be any gap between members to be riveted.

Driven rivets shall be checked with rivet testing hammer. When struck sharply on head with rivet testing hammer, rivet shall be free from movement and vibration.

Loose rivets and rivets with cracked, badly formed or deficient heads or with heads which are unduly eccentric with shanks, shall be cut out and replaced, preferably, by rivet busters or chisels. If rivet heads are removed by gas cutting, adequate care should be taken so that no damage is caused to any of the member of the joint.

2.16.7 *Alignment of Joints*

The alignment of plates at all bolted splice joint and welded butt joints shall be checked. Testing of flame cut and sheared edges is to be done where the hardness criteria is mentioned in QAP. Hardness testing shall be carried out on, at least, six specimens.

2.16.8 Inspection and Testing of Welded Joints

The Inspector designated by the purchaser shall ascertain that fabrication by welding is performed in accordance with the requirements of this guideline. Inspection of welds shall also be carried out in accordance with this guideline. For the provisions which are not incorporated in this guideline, IS: 822 "Code of Procedure for Inspection of Welds" shall be followed.

Inspector shall be furnished with complete detailed drawings showing the size, length, type and location of all welds, which are required to be made. The weld size shall be checked with fillet weld gauges as shown in **(Appendix-H, Fig. H-29).**

He shall be notified in advance of the start of any welding operations.

He shall have free access to the work being done at all reasonable times by the contractor and facilities shall be provided so that during the course of welding he may be able to inspect any layer of weld metal. He shall be at liberty to reject any material that does not conform to the provisions of this code and to require any defective welds to be removed and re-welded. A suggested proforma for welding records is shown in **Appendix-C**.

2.16.9 *Inspection Prior to Welding*

Parent Metal

i) All plates and sections shall be inspected in the contractor's works before fabrication. Verification of the quality of parent metal shall be carried out by reference to the relevant test certificate. The Inspector may, at his discretion, ask for spot checks to be made on the chemical composition and physical properties of the material.

ii) Freedom from harmful defects such as cracks, surface flaws, laminations and rough, jagged or imperfect edges shall be verified by visual examination of the material prior to welding. Dimensions of parts shall be checked by measurement.

iii) Edge preparation shall conform to the relevant drawings and meet the requirements of this guideline.

iv) After the parts are assembled in position for welding, the Inspector shall check for incorrect root gap, improper edge preparation and other features that might affect the quality of the welded joint.

Verification of operator's qualification - Welding shall be permitted to be performed only by welders and welding operators who are qualified.

v) The Contractor shall, if so required, prescribe the welding procedure to be followed. Before any welding on the actual job is allowed under the contract, the Inspector shall verify whether the welding procedure is in accordance with the provisions of IS: 9595 and IS: 4353, as applicable.

2.16.10 *Inspection During Welding*

Filler Material - Filler material shall be tested periodically to ensure that the specified quality is being consistently maintained.

While welding is in progress, visual examination shall be employed to check details of work, such as proper arc, arc length, speed of weld deposit, sequence of welding, cleaning of slag after each run in multi-run welding, electrode spattering, manipulation of the electrode, employment of proper current and voltage etc. Particular care shall be taken during the early stages of the work.

All facilities necessary for stage inspection during welding and on completion shall be provided to Engineer or their inspecting authority by contractor.

Adequate means of identification either by an identification mark or other record shall be provided to enable each weld to be traced to the welder(s) by whom it was carried out.

All metal arc welding shall in compliance with the provision of IS: 9595.

The method of inspection shall be according to IS: 822 and extent of inspection and testing shall be in accordance with the relevant standards or in the absence of such a standard, as agreed with the Engineer.

2.16.11 *Procedure Tests*

The destructive and non-destructive test of weld shall be carried out according to IS: 7307(Part-1).

One or more of following methods may be applied for inspection or non-destructive testing of weld.

2.16.12 *Visual Inspection*

For visual inspection of defects, the weld surface shall be thoroughly cleaned of oxide layers and adherent slag. If chipping hammer is used to remove slag, care shall be taken to see that hammer marks do not obscure the evidence of fine cracks. Brushing with a stiff wire-brush or grit blasting shall normally be followed.

Welding Profile - The finished welds shall be visually inspected and shall conform to the size and contour specified in the drawings (Acceptable and defective weld profiles are illustrated in **Appendix-H, Fig. H-24 to H-28**. Conformity of fillet welds as to size and contour shall be determined by the use of gauges **(Appendix-H, Fig. H-29).** Concavity and excessive convexity of fillet welds shall be marked for correction.

2.16.13 *Acceptance Levels for Quality of Welds*

Welds shall meet acceptance levels as per **Appendix-E**.

Dimensional Check-The weld met shall be inspected for dimensional accuracy (including war page) and shall be within the tolerances specified.

All welds shall be visually inspected, which should cover all defects of weld such as size, porosity, crack in the weld or in the HAZ (Heat Affected Zone) etc. Suitable magnifying glass may be used for visual inspection. A weld shall be acceptable by visual inspection if it shows that:

i) The weld has no crack.
ii) There is adequate fusion between weld and base-metal and between adjacent layers of weld metal.
iii) Weld profiles are in accordance with requisite clauses of IS: 9595 or as agreed with Engineer.
iv) The weld shall be of full cross section, except for the ends of intermittent fillet welds outside of their effective length.

When weld in transverse to the primary stress, undercut shall not be more than 0.25 mm deep in the part that is under cut and shall not be more than 0.8 mm deep when the weld is parallel to the primary stress in the part that is undercut.

The fillet weld in any single continuous weld shall be permitted to under run the nominal fillet weld size specified by 1.6 mm without correction provided that undersize portion of the weld does not

exceed 10% of the length of the weld. On the web-to- flange welds on girders, no under run is permitted at the ends for a length equal to twice the width of the flange.

The piping porosity in fillet welds shall not exceed one in each 100 mm of weld length and the maximum diameter shall not exceed 2.4 mm, except for fillet welds connecting stiffeners to web where the sum of diameters of piping porosity shall not exceed 9.5 mm in any 25 mm length of weld and shall not exceed 19 mm in any 300 mm length of weld.

The full penetration groove weld in butt joints transverse to the direction of computed tensile stress shall have no piping porosity. For all other groove welds, the piping porosity shall not exceed one in 100 mm of length and the maximum diameter shall not exceed 2.4 mm.

2.16.14 *Non-Destructive Testing (**Appendix-I**)*

Magnetic Particle & Radiographic Inspection

Weld that are subject to radiographic or magnetic particle testing in addition to visual inspection shall have no crack.

Magnetic particle test shall be carried out for detection of crack and other discontinuity in the weld according to IS: 5334.

Radiographic test shall be carried out for detection of internal flaws in the weld such as crack, piping porosity inclusion, lack of fusion, incomplete penetration etc. This test may be carried out as per IS: 1182 and IS: 4853.

2.16.15 *Ultrasonic Inspection*

The Ultrasonic testing in addition to visual inspection shall be carried out for detection of internal flaws in the weld such as cracks, piping porosity inclusion, lack of fusion, incomplete penetration etc. Acceptance criteria shall be as per IS: 4260 or any other relevant IS Specification and as agreed by Engineer.

2.16.16 *Liquid Penetrant Inspection*

The liquid penetrant test shall be carried out for detection of surface defect in the weld, as per IS: 3658, in addition to visual inspection.

The non-destructive testing of following welds be carried out using one or more of the methods described by Engineer.

i) All transverse butt weld in tension flange.
ii) 10% of length of longitudinal butt welds in tension flange.
iii) 5% of the length of longitudinal and transverse butt welds in compression flanges.
iv) All transverse butt welds in webs adjacent to tension flanges as specified by the Engineer.

There should be change in corresponding Cl no below this

The particular length of welds to be tested shall be agreed with the Engineer, in case of (ii) and (iii).

Where specified by the Engineer, bearing stiffeners or bearing diaphragms adjacent to welds, flange plates adjacent to web / flange welds, plates at cruciform welds, plates in box girder construction adjacent to corner welds shall be ultrasonically tested after fabrication.

Any lamination, lamellar tearing or other defect found shall be recorded and reported to Engineer for his decision.

2.16.17 *Marking of Defective Welds*

The marking shall be positive and clear and in accordance with the method of marking followed and understood by the Inspector and shop personnel involved in making the repairs.

Marking shall be permanent enough to be evident until the repair is carried out and the inspection completed.

After the repair has been done, it shall be inspected again and properly marked to indicate whether the repair is satisfactory or not.

The testing of weld for cast steel shall be carried out as may be agreed by the Engineer.

2.16.18 *Testing of Stud Shear Connectors*

The fixing of studs after being welded in position shall be tested by striking the side of the head of the stud with 2 kg hammer, to the satisfaction of the Engineer.

The selected stud head stroked with 6 kg hammer shall be capable of lateral displacement of approximately 0.25 height of the stud from its original position. The stud weld shall not show any signs of cracks or lack of fusion.

The studs which have failed the tests given above shall be replaced.

2.16.19 *Final Inspection of Components*

The fabricated member/ component made out of rolled and built-up section shall be checked for compliance of the tolerances given in **Appendix-B.** Inspection of member / components for tolerances and the check for deviations shall be made over the full length. During checking the inspection equipment shall be placed in such a manner that local surface do not influence the results. Out-of-plane deviations for plates and other flat surfaces shall be checked at right angle to the surface over the full area. The relative cross girder or cross frame deviation shall be checked over the middle third of length of cross girder or frame between each pair of webs and for cantilever at the end of member. The web of rolled beam or channel section shall be checked for out-of-plane deviation in longitudinal direction equal to the depth of the section. During inspection, the component/ member shall not have any load or external restraint.

2.16.20 *Inspection Stages*

The inspection to be carried out for compliance of tolerances for completed parts, component members on completion of fabrication and before surface preparation for painting and erection. For webs of plate and box girder, longitudinal compression flange stiffeners in box girders and

orthotropic decks and all web stiffeners at site joints, on completion of site joint. For cross girders and frames, cantilevers in orthotropic decks and other parts, on completion of site assembly.

Where, on checking member / component for the deviations in respect of out of plane or out-of-straightness at right angles to the plate surface, and any other instances, exceed tolerance, the maximum deviation shall be measured and recorded. The recorded measurements shall be submitted to the Engineer, who will determine whether the component / member may be accepted without rectification.

2.17 Bearings

Installations of bearings shall be as per IRC:83 "Standard Specifications and Code of Practice for Road Bridges, Section IX – Bearings, Part III: POT, PIN, Metallic Guide and Plane Sliding Bearings".

2.18 Painting and Metallising (Refer **Appendix-K)**

2.18.1 *General*

No part of the work shall be painted or coated, packed or dispatched, until it has been finally inspected and approved by the inspecting Officer. Dry film thickness shall be measured by paint coat meter (Preferably digital) or any other approved method.

When so specified, the whole of the work except machined surfaces, shall be given protective coating using one of the systems of painting or metalizing. Prior to the application of protective coating, the surface or work shall be carefully prepared removing mill scale, rust, etc., using wire brushes, shot or grit blasting as stipulated and approved by the Engineer.

2.18.2 *Surface Preparation*

Remove oil/grease from the metal surface by using petroleum hydrocarbon solvent as per IS: 1745.

Prepare the surface by shot/grit blasting to **Sa 2.5 (Swedish standard SIS 055900)** or **ISO 8501-1** to ensure proper surface cleanliness and roughness.

2.18.3 *Metalizing and Painting*

For locations where the girders are subjected to salt spray such as in close vicinity of the sea and/or over creeks etc., protective coating by metalizing with sprayed Aluminium followed by painting as per painting schedule given below may be applied. The metalizing should be as per IS: 5905.

Primer Coat: One Coat of Etch primer to IS: 5666.

For locations where girders are exposed to corrosive environment i.e., girders in industrial, suburban or coastal areas, components of the girders shall be given protective coating by metalizing followed by painting using epoxy based paints as per the following painting schedule.

Primer coat- Brush / airless spray of two coats of Epoxy Zinc Phosphate primer of 60 microns min dry film thickness (DFT) and giving sufficient time gap between two coats to enable the first coat of primer to hard dry.

Intermediate Coat: One coat of Zinc Chrome primer to IS: 104.

Finishing Coat: Two coats of Aluminium paint to IS: 2339 brushing or spraying as required. One coat shall be applied before the fabricated steel work leaves the shop. After the steel work is erected at site, the second finishing coat shall be applied after touching up the primer and the finishing coat if damaged in transit.

Intermediate Coat: Brush / airless spray of one coat of Epoxy Micaceous Iron Oxide paint of DFT 100 microns and allowed to hard dry.

Finishing Coat: Brush / airless spray of two coats of Polyurethane Aluminium as finishing for coastal locations after application of Polyurethane Red Oxide of 40 microns minimum DFT and giving sufficient time gap between two coats to enable the first coat to hard dry. The finishing coats shall be applied in shop and touched after erection, if necessary.

Where the life of protective coating is required to be longer to avoid frequent paintings, because of the accessibility of locations and where metalizing or epoxy based painting is recommended but there are no facilities available for the same, protective coating by painting as per following painting schedule may be applied.

Primer Coat: One coat of ready mixed paint Zinc Chrome priming to IS: 104 followed by one coat of ready mixed paint Red Oxide Zinc Chrome priming to IS: 2074.

Intermediate: Two coats of Zinc Chromate Red Oxide primer to IS :2074.

Finishing Coat: Two finishing coats of Aluminium paint to IS: 2339 or of any other approved paint shall be applied over the primer coats. One coat shall be applied before the fabricated steel leaves the shop. After the steel work is erected at site, the second finishing coat shall be applied after touching up the primer and the finishing coat if damaged in transit.

---

3 ERECTION

3.1 Transportation, Handling and Erection

3.1.1 *General*

The handling, transportation and erection of bridges and their components should be done which utmost care & safe procedures.

The actions to be taken for various operations in handling, transportation in shop floor and in transit, should be done with safe working procedures and be intimated to the engineer.

3.1.2 *Transportation to Site and Handling*

Packing, placement, fastening of components and their transportation to site shall be carried out with care and it shall be ensured that damages or undue distortion do not occur.

Before deciding the mode of transportation, the route shall be surveyed and local restriction considered. Instructions for proper handling during transportation and storage shall be issued.

All component shall be securely lashed during transportation to ensure that they do not fall / slide or endanger other traffic. All possible safety measures shall be adopted.

In case of heavy and unusual structures, availability of the transportation medium shall be checked in advance and arrangements tied up.

Stability of the members shall be checked and ensured during loading and transportation.

Protruding members shall be specially protected during transit. Threaded and machined portion of fabricated structures shall be oiled/ greased against corrosion and carefully protected against damage.

Loose or sub - assembled items shall have clear mark number as per the erection drawing. Critical items shall be given special care.

Small items such as nuts, bolts, washers, packing plates, rivets, electrodes shall be dispatched in container and their details shall be fully listed to ensure proper receipt and storage.

Under loaded consignments shall be normally avoided.

All consignments of steel work shall carry dispatch advice / challan to maintain the correlation between fabricated components and components sent to site for erection.

For access to the erection site it may be necessary to construct temporary road / bridges which allow safe movement of the fabricated materials & equipment.

3.1.3 *Storage and Handling at Site*

Suitable area for storage of structures and components shall be located near the site of work. The access road shall be free from water logging during the working period and the storage area should be on a level and firm ground.

The site store should be provided with adequate handling equipment such as mobile crane, gantries, derricks, chain-pulley blocks, winch and other lifting tools and tackles of adequate capacity.

Stacking area shall be properly leveled and shall have access tracks for movement of cranes. Racks, sleeper stands and requisite open space for storage shall be available. Storage shall be planned to avoid damage or distortion of the components and availability to suit the erection sequence.

Fabricated materials shall be stored in such a way that erection marks are visible and shall have accessible to handling equipment. They should be stored in such a way that they do not come in contact with earth surface or water.

Small fittings, hand tools etc., are to be kept in containers in covered stores.

Safety requirement for equipment should be as per IS: 7293, and for storage IS: 7969 shall be followed.

For useful information about Cranes see **Appendix-M**.

3.2 Erection Scheme and Erection Procedure

3.2.1 *General Considerations*

The construction methodology, types of equipment to be used and other relevant information relating to the erection scheme shall be intimated to the engineer for his approval.

While preparing erection scheme, provision for wind loads shall be made according to local conditions. Ground conditions should be stable enough to ensure that the temporary supports do not settle during erection.

Span erected upon staging shall be supported upon suitable blocks and camber jacks. Care shall be taken to ensure that the girders are erected at the correct elevation, alignment and camber, when completed.

When chains are used for lashing, care must be taken to protect the edges of members from denting and distortion.

Proper method shall be used for lifting and slinging of flexible members to ensure that permanent deformations are not made.

Erection work shall start only when resources, as per approved scheme, are available at site and the foundations for supports are ready for taking the load.

In works of erection involving high volume, mechanization to the possible extent, shall be adopted.

The structure shall be divided into modules. Before erection the modules shall be pre-assembled in a suitable yard / platform and its matching with members of the adjacent module shall be checked.

Where erection has to be carried out on a difficult terrain, the trial assembly of the girder should be done and simulated load shall be applied to study the effect.

The supporting structure shall be set out to the required lines and levels. Sufficient packing materials should be available at site to start erection. The Erection of the girder shall be completed with sufficient drifts and bolts and in the required position.

3.2.2 *Plants and Equipment*

Capacity chart for each crane configuration and boom length should be studied in detail and placement of the crane planned accordingly.

Periodical inspection of the crane and other lifting equipment shall be made to ensure that the equipments are in working order. The lifting gear and machinery should have the periodical load testing certificate and declared fit for service by authorized personnel only.

Prior to actual commencement of erection all equipment, machinery, tools, tackles, shall be load tested and witnessed by the engineer, to ensure their efficient working.

Appendix-L, illustrates some typical lifting tools, tackles and lifting methods.

3.2.3 *Temporary Works*

All temporary work shall be properly designed and constructed for construction loads. Temporary bracing shall be provided to take care of rigidity during erection.

3.2.4 *Inspection and Testing Prior to Erection*

Visual inspection is essential in vulnerable areas to detect displacements, distress, damages etc. Deflection tests shall be conducted in respect of supporting structures, launching truss as also the structure under erection. Any looseness of fittings or unusual behavior shall be noted and adequate precautions taken.

Safety requirements shall conform to IS: 7205 and IS: 7293

Organized "Quality Surveillance" checks shall be exercised intermittently.

For erection Inspection checklist see **Appendix-N**.

3.2.5 *Lifting and Assembling*

Planned systems for achieving and maintaining stability at all times during construction shall be fully detailed in the method statement which should contain precise step-by-step instructions.

These shall be indicated on the detailed working drawings and given to the erection supervisor.

Any special or unusual features of the structural design which may affect stability during erection shall be highlighted and emphasized on drawings which shall form part of the method statement.

The ground on which the crane shall stand must be firm, leveled and free from obstruction. All outriggers must be fully extended, jacked and locked.

The Crane shall be leveled before attempting the lift and in many cranes, there may be ‘level bubble’ which can be used to satisfy this condition.

Before using the equipment, the safe working load shall be considered and shall be inspected for defects, if any including excessive wear & tear.

3.2.6 *Bearing and Anchorages*

Bed plates shall be set to required level and fixed accurately in position by giving full and even bearing by setting them on a layer of cement sand and cast iron chips as approved and directed by the engineer.

The holes shall be drilled, where necessary, and the anchor bolts set. The bolts shall be set accurately and fixed with cement grout or any other grouting material, as approved by the Engineer to completely fill the holes.

3.2.7 *Cambering for Erection of Open Web Girders*

The joints of the chords shall be drifted, bolted and preferably riveted to their geometric outline.

All other members are to be elastically strained into position by external forces, so that as many holes as possible are fair when filled with rivets.

Drifting of joints shall be avoided as far as possible, and when necessary, should be done with great care and under close expert supervision. Hammers not exceeding one kg in weight shall be used with turned barrel drifts and a number of holes drifted simultaneously, the effect of the drifting shall be checked by observation of adjacent unfilled holes.

The first procedure during erection consists of placing camber jacks in position on which the structure shall be supported. The camber jacks shall be set with their top level, and with sufficient run out to allow for lowering of panel points except the centre by the necessary amounts to produce the required camber in the main girders. It is essential that the camber is accurately maintained throughout the process of erection and it should be constantly checked. The jacks shall be spaced so that they shall support the ends of the main girders and the panel points. The bottom chord members shall then be placed on the camber jacks, carefully leveled and checked for straightness and the joints made and riveted up.

The vertical and diagonal web members, except the posts, shall then be erected in their proper positions on the bottom chords. It is recommended that temporary top gussets, the positions of the holes in which are corrected for the camber change of length in the members, should be used to connect the top trends of the member this will ensure that the angles between the members at the bottom joints are as given by the nominal outline of the girders. The vertical and diagonal shall then be riveted/ bolted to the lower chords.

All panel points, except the centre, shall now be lowered by amounts to produce the correct camber in the main girders as shown on the camber diagram.

The top chord should be erected piece by piece working symmetrically from the centre outwards, and the joint made by straining the members meeting at the joint and bringing the holes into correct position.

The temporary gussets, if used, shall be replaced by the permanent gussets in the same sequence as the erection of the top boom members.

The end posts shall be erected last. The upper end connection should preferably be made first and if there is no splice in the end raker, the final closure made at the bottom end connection. If there is a splice, the final closure should be made at the splice.

When cantilever method of erection is used, the above procedure does not apply.

3.3 Joints

3.3.1 *Bolted Joints*

No joint shall be assembled for bolting until the contact surface have been properly inspected to ensure that they are free from dirt, scales and other foreign materials.

Each bolt and nut shall be assembled with at least one washer. A washer, conforming to **Clause 502.4** of IRC:24, shall be placed under the rotating component.

Where the angle between the axis of the bolt and the joints surface is more than 3 degree off normal, a tapered washer shall be used against the tapered surface. The non-rotating components shall preferably be placed against the tapered washer.

The nut should be placed so that the mark to identify a high strength nut is visible after tightening.

Packing shall be provided wherever necessary to ensure that the load transmitting plies are in effective contact when the joint is tightened to the 'snug-tight' condition. All packing shall be of steel with a surface condition similar to that of the adjacent material.

The holes in the parts to be joined shall be aligned to permit the bolts to be positioned without damage to the threaded portion of the bolt. Drifting to align holes shall not distort the metal or enlarge the holes.

Snug tightening and final tensioning of the bolts shall proceed from the stiffest part of the joint towards the free edges.

High strength bolts, conforming to IS: 3757, may be used temporarily during erection to facilitate assembly. They shall not be finally tensioned until all bolts in the joint are snug-tight in their correct sequence.

Re-tensioning of bolts which have been fully tensioned shall be avoided wherever possible. If re-tensioning must be carried out it shall only be permitted once and only when the bolt remains in the same hole in which it was originally tensioned and with the same grip.

Under no circumstances shall bolts, which have been fully tensioned, be reused in another hole.

3.3.2 *Riveted Joints*

All rivets shall be properly and uniformly heated to straw heat for the full length of the shank. The head of the rivet, particularly in long rivets, shall be heated more than the point. Sparking or burnt

rivets shall not be used. Pneumatic / hydraulic operated dolly and riveting gun should be used for holding the rivet head and forming the rivet head at the point end.

Where support is not available to hold the rivet head by pneumatic / hydraulic operated dolly or any other mechanical method, head forming of the rivet should be done by utilizing two riveting gun, operating simultaneously, from both ends of the rivet

Gauges for rivet dimensions and contours shall be provided by the contractor for the use of the Inspecting Officer.

Rivets when driven shall completely fill the hole. The formed head of the rivet should be concentric with the shanks and shall be in full contact with ply surface. Driven rivets shall be free from movement or vibration, when struck sharply on the head with the 110 gm rivet testing hammer. While riveting built-up members great care should be exercised to ensure that the set of holes for field rivets in each flange of the built-up member, is aligned dead-square in relation to that in the other flange and not abrogated.

All loose, burnt, head cracked, badly formed, eccentric and deficient head rivets shall be cut out and replaced. Rivets shall also be cut out when required for the examination of the work. Actual method of cutting out shall be approved by the Engineer.

Recapping and caulking should not be done.

Riveting shall be started when the Engineer gives permission after personally satisfying himself about the correctness of the assembly, the suitable cambering and proper alignment of the girder and ensuring about the tightening of service bolts and concentricity of field rivet holes.

Special care should be taken that service bolts are frequently re-tightened as the riveting proceeds.

All field rivets shall be tested as directed by the Engineer.

Where practicable all riveting shall be done by pneumatic or hydraulic riveting machine. The working pressure to be used for the riveting shall be accepted by the Engineer.

Hand riveting shall only be done when sanctioned by the Engineer. In such cases, means shall be adopted to ensure the rivets being used fill the rivet holes completely, the snap is used only to give the correct head formation.

When all the rivets of joints have been finally passed, they shall be painted as under:

One coat of ready mixed Zinc Chrome Primer to IS: 104 followed by one coat of ready mixed paint Red Oxide Zinc Chrome primer to IS: 2074.

Finishing coat should be done at the time of final painting.

3.3.3 *Welded Joints*

Any connection to be site welded shall be securely held in position by approved means to ensure accurate alignment, camber and position before welding is commenced.

WPS shall be prepared and got approved by the engineer. All welding's are to be carried out as per IS: 816 / IS: 9595 with suitable consumables, as approved in the WPS. All welds shall be sound and shall conform to **Clause No. 512.4.4** of IRC: 24.

For welded connections, welders' qualification are to be done as per relevant IS code.

Non-Destructive Tests (NDT) of joints as per designer's directives are to be carried out.

Precision non-destructive testing instruments available in the market should be used for noting various important parameters of the structures frequently and systematic record should be kept.

APPENDIX – A
(Refer Clause 2.16.1)

INSPECTION REGISTER

A.1 JIGS REGISTER

This register shall be maintained for keeping records of details of jigs, their approval and modification/rectification to the jigs. One page should be allotted for each jig and details mentioned in the following Proforma:

a) Description of Jigs.

b) Jig No.

c) Shipping mark of the components for which jig is made.

d) Drawing No. for the component.

Date of Inspection	Observation/Inspection Notes	Compliance Action	Initial of Supervision In-Charge
1	2	3	4

In the beginning of Register, a statement of jigs shall also be placed in the following proforma.

Jig No.	Description of Jig	Shipping Mark of the Component	Drg. No. as per which Jigs is Made/Modified	Inspecting Official's Approval Details
1	2	3	4	5

A.2 RIVET CHECKING REGISTER

This register shall be maintained for keeping records of rivet quality checking and replacement of defect rivets. Register shall be maintained in the following proforma:

Component Description	Date of Riveting	Riveting Party	Number & Nature of Defective Rivets	Number of Defective Rivets Replaced	Initial of Supervision In-Charge
1	2	3	4	5	6

After riveting, component has been inspected and defective rivets have been replaced, the Supervisor-in-Charge of riveting should put a stencil mark on the component to this effect.

A.3 MATERIAL OFFERING AND INSPECTION REGISTER

This register shall be maintained separately for each work order for keeping record of material offered for inspection, inspection remarks and passing details. One page should be allotted for individual members or fittings. Proforma shall be under:

a) Description of component/fitting.

b) Shipping mark.

c) Quality required per span.

Span No.	Initial of Supervisor Offering Material for Inspection	Inspecting Official Remarks	Compliance Action	Seal & Initial of Inspecting Official	Dispatch & Consignee Details
1	2	3	4	5	6

A.4 INSPECTION NOTES AND COMPLIANCE REGISTER

This register shall be maintained for record of compliance action taken Engineer Inspection notes. IKN this register one copy of the inspection note received from Engineer shall be pasted and compliance action record against each item.

A.5 WELDING PROCEDURE DATA REGISTER

In this register complete details of welding of welded girders shall be maintained in the proforma under:

Name of Work_____

Contract/ Work Order No._____

Span No._____

Date of Welding	Girder Component & its Sl. No.	Welding Joint Description	Name of Welder/ Ticket No.	WPSS No. Followed
1	2	3	4	5

Welding consumable used		Welding Parameters			Weld Repair Details	Run on/Run off tabs No. if any	Radiography No. if any	Initial of Supervisor In-Charge
Electrode / Wire	Flux	Current (Amp.)	Arc Voltage (Volt)	Travel Speed (m/min)				
6	7	8	9	10	11	12	13	14

The welding data record to be submitted to Engineer while offering the welded girders for inspection, shall be prepared based on the details recorded in this register.

A.6 RADIOGRAPHIC INSPECTION REGISTER

Record of radiographic inspection of welded girders shall be maintained in the register in the Proforma given below:

Name of Work	Span No.	Girder Part	Weld joint Description	Date of Radiographic Inspection	Radiograph No.	Observation	Result	Initial of Supervisor In-Charge
1	2	3	4	5	6	7	8	9

A.7 RADIOGRAPHIC INSPECTION REGISTER

Record of radiographic inspection of welded girders shall be maintained in the register in the proforma given below:

Name of Work_____

Contract/ Work Order No._____

Span No._____

Girder Component Description & Identification No.	Type & Sized of Rolled Section	Material Test Certificate No.	Cast No.	Steel Quantity as per the Test Certificate	Steel Manufacturer Supplier	Initial of Supervisor In-Charge
1	2	3	4	5	6	7

One page should be allotted for each span.

MANUFACTURING TOLERANCE

B.1 PLATE GIRDER

			Tolerance in mm		Notation in the Fig. B-1
			(Plus)	(Minus)	
	a)	Overall length of the girder	6	3	A
	b)	Distance between centers of bearings	1	1	B
	c)	Depth over angles	3	1	C
	d)	Corner of flange angle to edge of web at any place	0	2	D
	e)	Diagonal at either end of the assembled span	3	3	E
	f)	Centres of intersection of diagonals with girder flange measured along the girder flange	3	3	F
	g)	Butting of Compression ends			
		i) Throughout	0	0.15	G
		ii) Locally	0	0.25	G
	h)	Butting edge at web splices	0	1	H
	i)	Straightness of girder bottom laid on the ground and checked with piano wire			
		i) Vertical Plane			
		Convexity	0	3	J
		Concavity	0	0	J
		ii) Horizontal Plane	2	2	J

B.2 OPEN WEB GIRDER

	a)	Overall length of Girders	1	1	K
	b)	Distance between centre to centre of bearings	1	1	L
	c)	Cross diagonals of assembled bays	1	1	M
	d)	Centre to centre of cross girders	1	1	N
	e)	Centre to centre of Rail bearer	1	1	P
	f)	Panel length in lateral bracing system	1	1	Q
	g)	Distance between inter section line of chords vertical & horizontal	1	1	R
	h)	Butting edges of compression members			
		i) Throughout	0	0.15	S
		ii) Locally	0	0.25	S
	i)	Twist in members	0	0	T
	j)	Lateral distortion between points of lateral support	.001L	.001L	U

B.3 HOLES

	a)	Between any two holes in group	0.5	0.5	V
	b)	Between holes of one group and another	1	1	W
	c)	Edge distance	0.5	0.5	X
	d)	Distance of 'GO' gauge open holes in two or more thickness	0	0.8	Y

B.4 SPECIAL FABRICATION TOLERANCE AS APPLICABLE TO WELDED PLATE GIRDER

	Description	Tolerance in mm
1.	Depth at the centre of web	+ 2 to -1
2.	Flange out of square for compression member and beams	1/200 or 3 max from edge whichever is less
3.	Displacement of vertical axis of the web with reference to flange	2
4.	Box width of member	0 to + 3
5.	Verticality of stiffener or diaphragm out of plumb	2
6.	Overall length of girder	+ 6 to - 3
7.	Depth of the girder at the ends	+ 3 to - 1
8.	Depth of the girder at the centre of span	+ 2 to – 1
9.	Distance between centre of bearings	+ 1 to – 1
10.	Diagonal at either ends of assembled span	+ 3 to – 3
11.	An allowable limit for wed bucking or undulkation shall be flatness at right angles to plate surface measured parallel to longer side in either direction calculated from the formulae $\Delta_x = \frac{G}{165}\sqrt{\frac{\sigma_y}{355}}$ or 4 mm which ever is the lesser Where Δ_x = Maximum deviation from straightness within a specific gauge length other values are constant σ_y =Yield stress of steel in N/mm^2 G = Length of measuring gaue in meter (G= a where a<2b and G=2b where a>2b)	

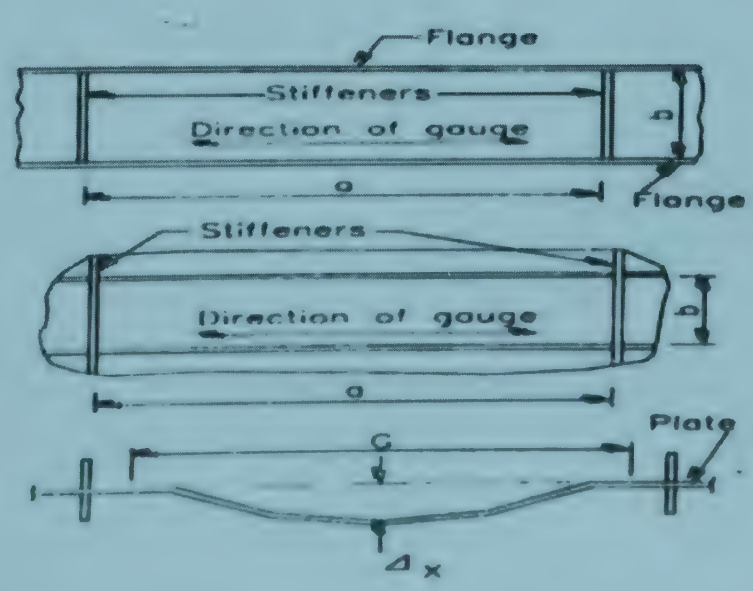

MANUFACTURING TOLERANCES IN GIRDERS

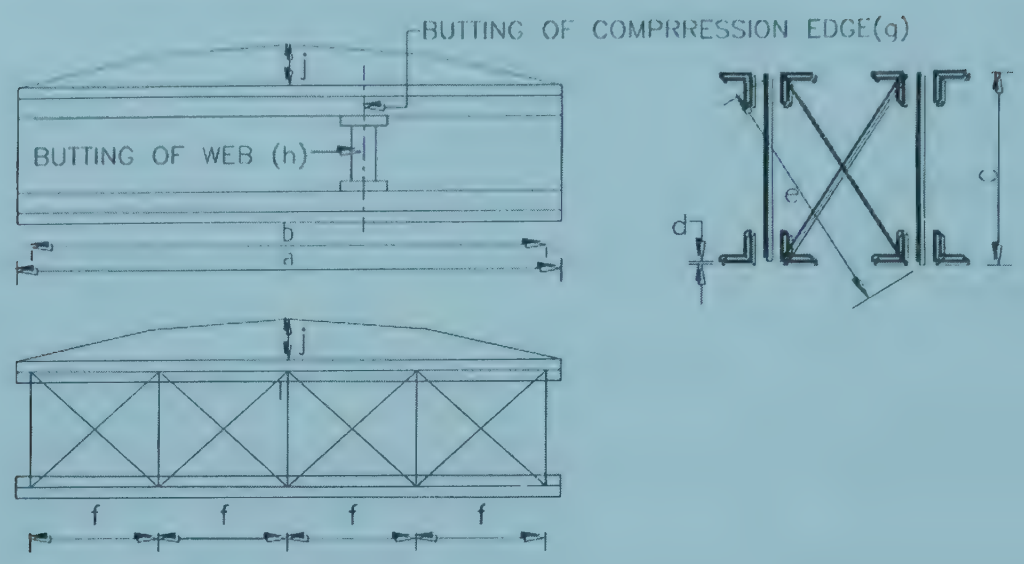

PLATE GIRDERS

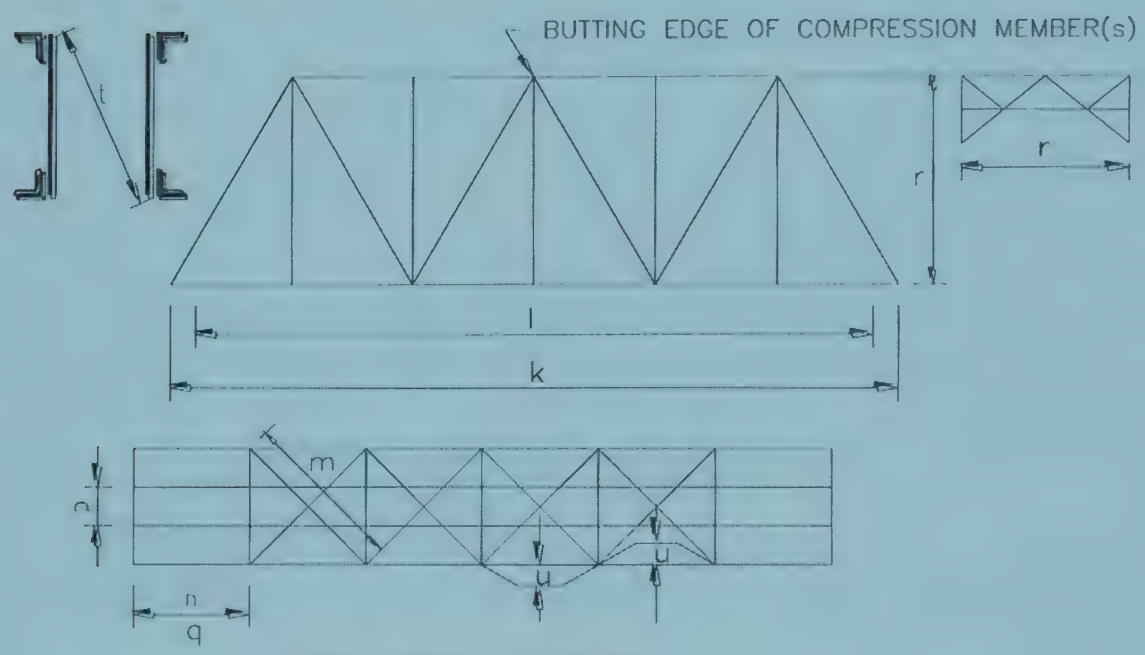

OPEN WEB GIRDERS

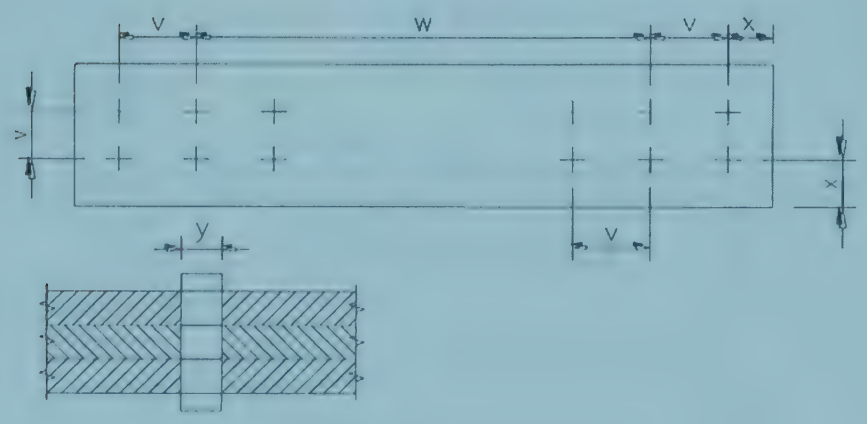

HOLES IN MEMBERS

Fig. B-1

APPENDIX - C
(Refer Clause 2.16.8)

WELDING RECORDS

C.1 PROFORMA FOR WELDING PROCEDURE SPECIFICATION SHEET

	Name & Address of Fabricator		:
	Welding Procedure Specification No.		:
C.1.1	Welding Joint Description		:
C.1.2	Base Metal		:
C.1.3	Base Metal		:
C.1.4	Welding Process		:
C.1.5	Welding Position		:
C.1.6	Welding Consumables		:
C.1.7	Electrode / Wire	Class	:
		Dia	:
		Drying Method:	
C.1.8	Flux	Class	:
		Type	:
		Drying Method:	
C.1.9	Shielding Gas		:
C.1.10	Base Metal Preparation		:
	Joint Design Details		:

(Give sketch showing arrangement of parts, welding groove details Weld passes & their sequence etc.,)

C.1.11	Joint Preparation	:	Type	:
C.1.12	Welding Current	:	Polarity	:
C.1.13	Welder Qualification	:		
C.1.14	Welding Parameters and Technique	:		
C.1.15	Welding Parameters	:		

Weld Pass No.	Electrodes Wire dia (mm)	Current (Amp.)	Arc Voltage (Volt)	Wire Feed Speed (m/min)	Travel Speed (m/min)	Electrical Stick Out (mm)	Gas Flow Rate (liter/min.)
1	2	3	4	5	6	7	8

C.1.16	Welding Sequence and Technique	:
	(Give Sketch Showing Sequence and Direction of Welding)	
C.1.17	Provision of Run-in and Run-off Tabs	:
C.1.18	Cleaning of Weld Bead before Laying Next Weld Bead	:
C.1.19	Root Preparation before Welding Other Side of Groove Weld	:
C.1.20	Preheating and Inter Pass Temperature	:
C.1.21	Peening	:
C.1.22	Post Weld Treatment	:
C.1.23	Rectification of Weld Defects	:
C.1.24	Inspection of Weld	:
C.1.25	Any other Relevant Details	:

C.2 PROFORMA FOR WELDING PROCEDURE QUALIFICATION RECORD

Name & Address of Fabricator :

C.2.1 Description of Weld Joint :

C.2.2 Welding Procedure Specification No. :

C.2.3 Name of Welder :

C.2.4 Date of Preparation of Test Piece :

C.2.5 Dimension of Test Piece :

C.2.6 Base Metal :

C.2.7 Welding Process :

C.2.8 Welding Position :

C.2.9 Welding Current : Type : Polarity :

C.2.10 Weld Joint Design Details :

C.2.11 Welding Consumables :

C.2.11.1 Electrode/Wire Class : Dia : Drying Method:

C.2.11.2 Flux : Type : Drying Method:

C.2.11.3 Shielding Gas :

C.2.12 Welding Parameters

Weld Pass No.	Electrodes/ Wire dia (mm)	Current (Amp.)	Arc Voltage (Volt)	Wire Feed Speed (m/min)	Travel Speed (m/min)	Electrical Stick Out (mm)	Gas Flow Rate (liter/ min.)
1	2	3	4	5	6	7	8

C.2.13 Preheating and Inter Pass Temperature :

C.2.14 Results of Qualification Test :

Test	Specification No	Results
1	2	3
Non-destructive Tests: i) Visual Examination ii) Dye Penetrate test iii) Magnetic particle test iv) Radiographic / Ultrasonic test Destructive Test: i) Micro-examination ii) Hardness survey iii) Fillet weld fracture test iv) Transverse tensile test Tensile strength Yield Stress Location of fracture v) All-weld tensile test Tensile strength Yield stress Elongation % vi) Guided bend test Root bend test Face bend test Side bend test vii) Any other test		

Signature _____

Designation _____

APPENDIX - D

SYMBOLS FOR WELDING ON DRAWINGS

The symbol for welding used on the drawings shall be in accordance with IS: 812 and IS: 813 (R-2003):

Welds may be indicated in accordance with the general recommendations for technical drawings. However, for the purpose of simplification the symbolic representations are described on the drawings for usual welds.

The symbolic representation shall give clearly all necessary indications regarding the specific weld to be obtained, without overburdening the drawing with notes or showing an additional view.

The symbolic representation also includes an elementary symbol which may be completed by:

a) Supplementary symbols,
b) A mass of showing dimensions, or
c) Some complementary indication (particularly for workshop drawings).

In order to simplify the drawings as much as possible, the recommended references be made to specific instructions or particular specifications giving all details of the preparations of edges to be welded and / or the welding procedures, rather than showing these indications on the drawings of the welded parts.

If there are no such instructions, the dimensions relating to the preparation of the edges to be welded and / or the welding procedures can be close to the symbol.

A distinction is made between the terms **"weld symbol"** and **"welding symbol"**. The welding symbol is a method of representing the weld symbol on drawings. The assembled **"welding symbol"** consists of the following eight elements or any of these elements as necessary: reference line, arrow, basic weld symbols, finish symbols, tail, and specification, processes, or other reference. The locations of welding symbol elements with respect to each other as shown on next page:

Standard Locations of Elements Welding Symbols:

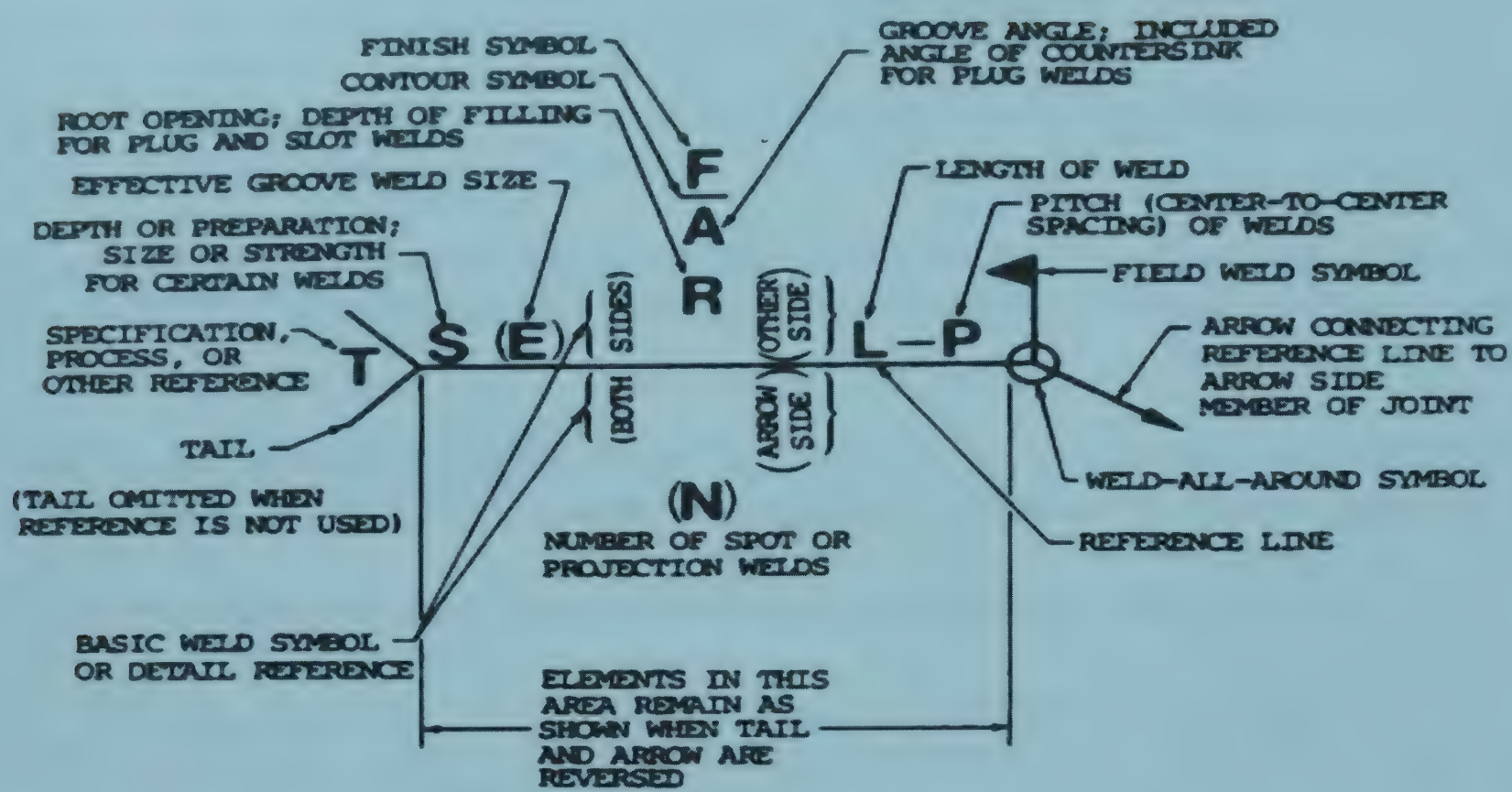

The various categories of welds are characterized by a symbol which, in general, is similar to the shape of the weld to be made.

The basic elementary symbols are shown below in a tabular form:

Table D.1 For Elementary Symbols

Sl. No.	Designations	Illustrations	Symbols
1.	Butt weld between plates with raised edges (the raised edges being melted down completely)		
2.	Square Butt Weld		
3.	Single V – Butt Weld		
4.	Single Bevel Butt Weld		
5.	Single V Butt Weld with broad root face		
6.	Single bevel Butt Weld with broad root face		
7.	Single U Butt Weld (parallel or sloping sides)		
8.	Single J Butt Weld		

9.	Backing run; Back or Backing weld		
10.	Fillet Weld	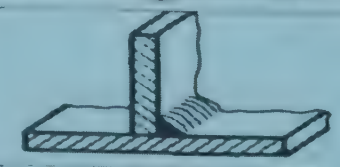	
11.	Plug weld; Plug or Slot Weld		
12.	Spot Weld	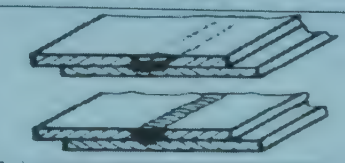	
13.	Seam Weld	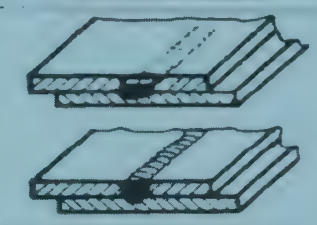	

The elementary symbols may be completed by another symbol (supplementary) characterizing the shape of the external surface of the weld.

The recommended supplementary symbols are given below in tabular form:

Table D.2 For Supplementary Symbols

Sl. No.	Shape of Weld Surface	Symbols
1.	Flat (usually finished flush) Weld	
2.	Convex Weld	
3.	Concave Weld	

The examples of combination of elementary and supplementary symbols are given below in tabular form:

Table D.3 For Examples of Application of Supplementary Symbols

Sl. No.	Designations	Illustrations	Symbols
1.	Flat (flush) Single V Butt weld		
2.	Convex Double V Butt Weld		
3.	Concave Fillet Weld		
4.	Flat (flush) Single V Butt Weld Flat with (flush) backing run		

The symbols covered in this document form only a part of the complete method of representation as shown in **Fig. D-1** which comprises in addition as:

a) An arrow line (1) for each joint as shown in **Fig. D-2** and **Fig. D-3**,

b) A dual reference line, consisting of two parallel lines, one continuous and one dashes (2) and,

c) A certain number of dimensions and conventional sign.

The location of weld is defined on the drawings by specifying as:

a) Position of the arrow line,
b) Position of the reference line, and
c) Position of the symbols.

The examples of the relation between "Arrow Line" and the joint are shown below in **Fig. D-2** and **Fig. D-3** explains the meaning of the terms: a) **"Arrow Side"** of the joint and **"Other Side"** of the joint.

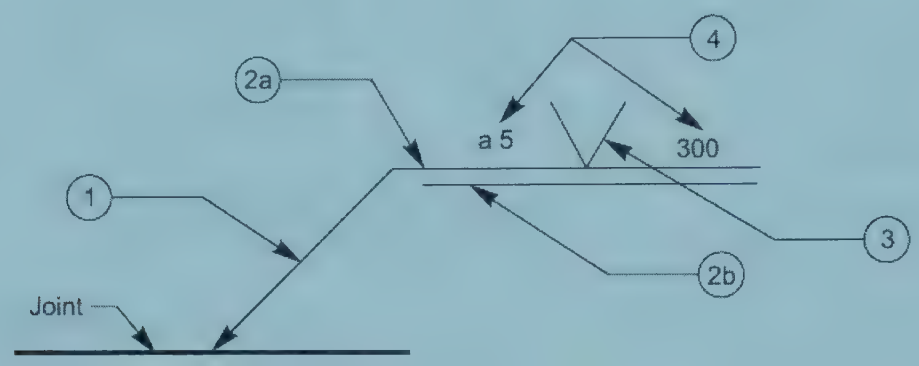

1 = Arrow Line
2a = Reference Line (Continuous Line)
2b = Identification Line (Dashed Line)
3 = Welding Symbol

Fig. D-1 Method of Representation

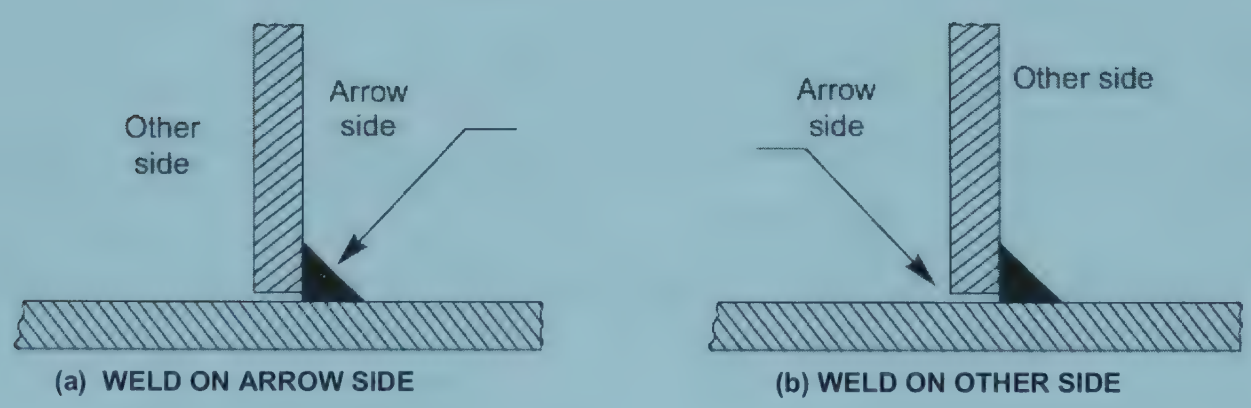

Fig. D-2 T- Joint with One Fillet Welds

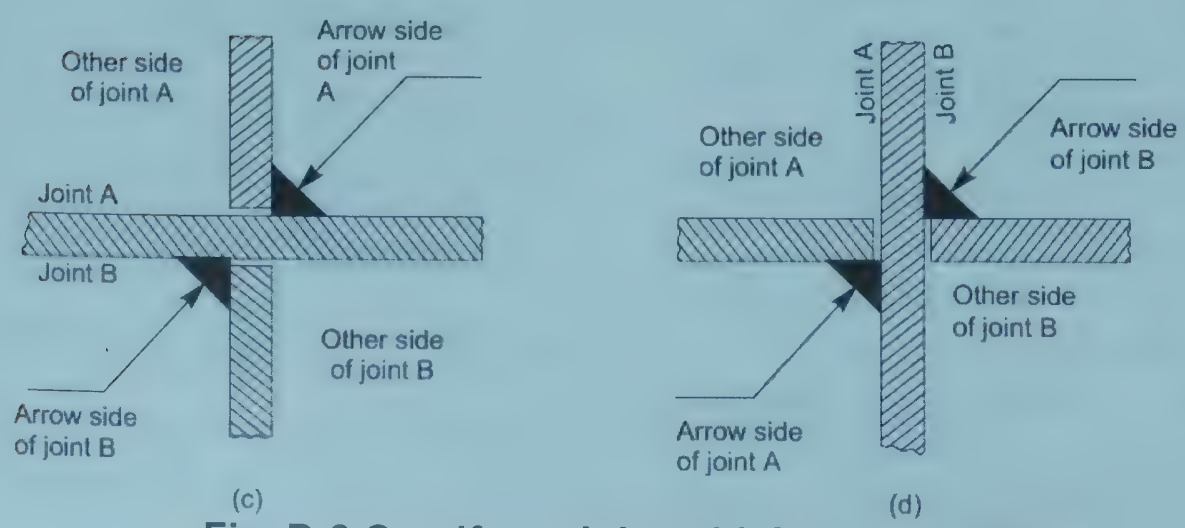

Fig. D-3 Cruciform Joint with Two Fillet Welds

The position of the arrow line with respect to the weld is generally of no significance as shown in **Fig. D-4(a)** and **Fig. D-4(b).**

However, in the case of single bevel butt welds, single-bevel butt welds with broad root face and J-butt welds, the arrow line shall point towards the plate which is prepared as shown in **Fig. D-4(c)** and **Fig. D-4(d)**.

The arrow line joins one end of the continuous reference line such that it forms an angle with it and shall be completed by an arrow head. In certain cases the arrow head may be omitted or replaced by dot.

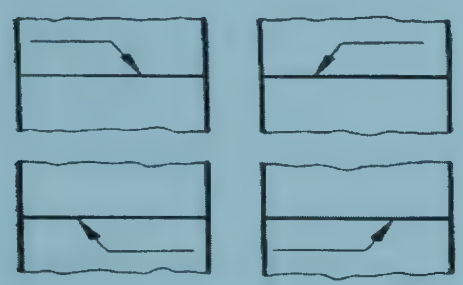

Fig. D-4(a)

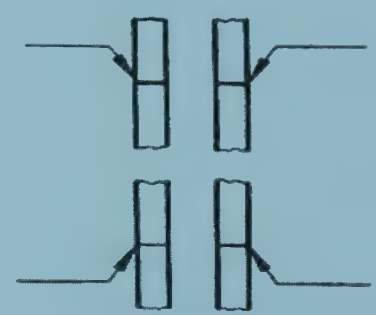

Fig. D-4(b)

Fig. D-4(c)

Fig. D-4(d)

The position of symbol with regard to the reference line shall be placed either above or beneath the reference line, in accordance with the following:

a) The symbol is placed on the continuous line side of the reference line if the weld (weld face) is on the arrow side of the joint as shown below in **Fig. D-5(a)**.
b) The symbol is placed on the dashed line side if the (weld face) is on the other side of the joint as shown below in **Fig. D-5(b)**.

For Symmetrical Welds Only

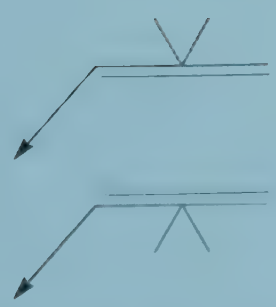

Fig. D-5(a) To be Welded on the Arrow Side

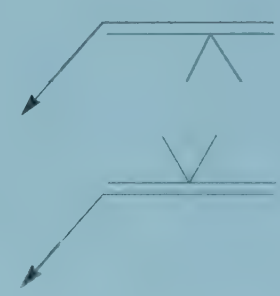

Fig. D-5(b) To be Welded on the Other Side

The dimension of each weld symbol may be accompanied by a certain number of dimensions, written as follows, in accordance with the following figures:

a) The main dimensions relative to the cross-section are written on the left-hand side (that means before) of the symbol.
b) The longitudinal dimensions are written on the right-hand side (that means after) of the symbol.

Fig. D-6

There are two methods to indicate dimensions for the fillet welds as shown below in **Fig. D-7** wherein the letters **"a"** or **"z"** shall always be placed in front of the value of the corresponding dimension.

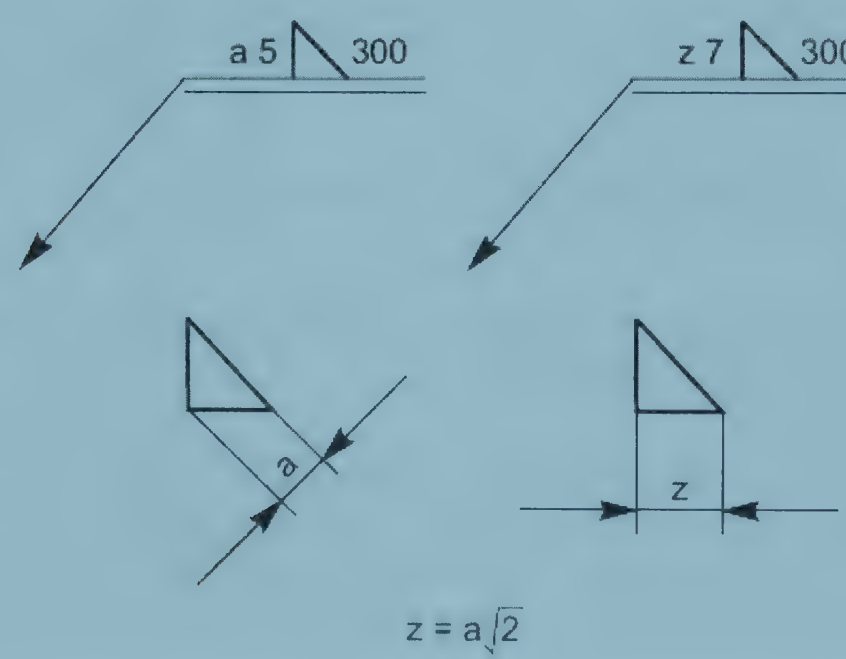

Fig. D-7

APPENDIX – E

(Refer Clause 2.16.13)

ACCEPTANCE LEVELS FOR WELDS

Defect Type	Permitted Maximum
E.1 Planar Defects	
a) Cracks and lamellar tears	Not permitted
b) Root concavity	0.1t or 1.2 mm whichever is less
c) Lack of root fusion	Not permitted
d) Lack of side fusion	Not permitted
e) Lack of inter-run fusion	Not permitted
f) Lack of root penetration	Not permitted
E.2 Cavities	
a) Isolated pores (or individual pores in a group)	Ø ≤ t/4 and also less than
	(i) 1.5 mm for t up to and including 25 mm; or
	(ii) 3.0 mm for t over 25 mm up to and including 50 mm; or
	(iii) 4.5 mm for t over 50 mm up to and including 75 mm; or
	(iv) 6.0 mm for t over 75 mm
b) Uniformly distributed or localized porosity	One percent by area (as seen in a radio graph) for t ≤ 25 mm and pro-rata for greater thicknesses
c) Linear porosity	Linear porosity parallel to the axis of the weld may indicate lack of fusion or lack of penetration and is, therefore, not permitted
d) Worm holes, isolated	l ≤ 6 mm w ≤ 1.5 mm
e) Worm holes, aligned	same as for linear porosity
f) Crater pipes	l ≤ 6 mm w ≤ 1.5 mm

E.3 Solid Inclusions (Slag Inclusions)

a) Individual and parallel to weld axis (as seen in the radiograph)

	t	l	w
i)	≤ 18 mm	≤ t/2 and ≤6 mm	≤1.5 mm
ii)	> 18 mm and ≤75 mm	≤ t/3	≤1.5 mm
iii	>75 mm	≤ 25 mm	≤1.5 mm
b) Linear group*			Aggregate length should not exceed 8% of length of group, which in turn should not exceed 12t in length
c) Individual and randomly oriented (Not parallel to weld axis)			Maximum dimension in any direction: 6 mm

E.4 Copper Inclusions	
(Detected by visual examination or by radiography)	Not permitted

E.5 Profile Defects	
a) Undercut	Slight intermittent undercut permitted, provided it does not form a sharp notch; depth should not exceed 0.4 mm
b) Shrinkage grooves and root concavity	Same as for under cut, depth should not exceed 1.2 mm
c) Excess penetration	H ≤ 3 mm Occasional local slight excess is allowable
d) Reinforcement shape	The reinforcement shall blend smoothly with the parent metal and dressing shall be as specified in drawing or required for NDT techniques
e) Overlap	Not permitted
f) Linear misalignment	H ≤ t /10 and ≤ 3 mm
g) Other profile defects	As per Clause 30.2

Symbols:

t = Thickness of parent metal. In the case of dissimilar thicknesses **t** applies to the thinner component
w = Width of defect, **l** = Length of defect, **h** = Height of defect, Ø = Diameter of defect

• Individual inclusions within the group should not exceed the sizes in 3(a) above. A linear group is defined as a number of inclusions in line and parallel to the weld axis where the spacing between their adjacent ends does not exceed 6 times the length of the longest inclusion within the group. With parallel groups, all inclusions count towards the aggregate.

APPENDIX – F
(Refer Clause 2.15.24)

PROCEDURE FOR PROVIDING PLUG WELDS AND STUD WELDS

Plug Welding

The holes shall be tapered to ensure adequate root penetration. Welding shall generally be carried out in flat position using a copper block plate of 25 mm minimum thickness as a backing surface. This plate shall have a depression of about 3 mm at the centre and in the line of the hole.

For welds to be made in the flat position, the arc shall be carried round the root of the joint and then carried along spiral path to the centre of the hole fusing and depositing a layer of weld metal in the root and bottom of the joint. The arc shall then be carried to the periphery of the hole and the procedure repeated, fusing and depositing successive layers to fill the hole. The slag covering the weld metal shall be kept molten, or nearly so, until the weld is finished. If the arc is broken, except briefly for changing the electrodes, the slag must be allowed to cool and be completely removed before starting the weld.

For welds to be made in the vertical position, the arc shall be started at the root of the joint, at the lower side of the hole, and carried upwards along a zig zag path depositing a layer about 5 mm thick on the exposed face and fused to the side of the hole. After cleaning the slag from the weld, subsequent layers shall be similarly deposited to fill the hole.

For welds to be made in the overhead position, the procedure shall be the same as for the flat position except that the slag shall be allowed to cool and shall be completely removed after depositing each layer until the hole is filled.

All plug welds shall be finished with reinforcement of about 3 mm which shall then be dressed flush.

Welding of Stud Shear Connectors, Its Procedure and Inspection

Shear Connectors on the top flanges of the steel girders provide the means to achieve composite action between the slab and the girders, thus increasing both stiffeners and strength.

Stud Shear Connectors shall be of the following type:

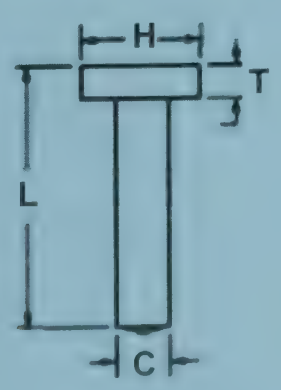

H = Head Diametre
T = Minimum Head Height
L = Length / Length of Tolerance

C =Shank Diametre

Fig. F-1

In order to achieve optimum results in any shear connector or headed anchor weld, it is imperative that the following procedures be followed:

Top Flange of Beam

The top flange of all beams or plates to be welded should be free from of paint, excessive rust or mill scale, dirt moisture and all other foreign material. These materials are contaminants to any welding process; buts especially stud welding due to the short duration of the weld.

Structural Ground

It is always recommended that the welding ground be attached to a spot on the beam that has been ground clean. Poor or inadequate ground connections can result in a loss of weld current and, therefore, affect weld quality.

Power Requirement for Operating Power Source

Consult the power source manual or manufacturer for the recommended incoming power requirements prior to energizing the power source. This includes proper fuse selection, and primary cable size and length for the power source being used. Inadequate incoming primary power or incorrect conductor size or length can contribute to a reduction in the required weld current.

Welding Current

It is essential to have the correct weld current for each application. The normal ranges are listed below. When excessive cable lengths are used, the result will be reduction in weld current. This can contribute to weld inconsistency or even weld failure. Always use 4/0 cables in the welding circuit, when excessive length is required. The amount of cable totally depends upon the power source being used. It may be necessary in some cases to parallel cable when long runs are necessary.

Table F.1

6.0 mm (1/4") = 350 to 450 amps	20.0 mm (3/4") = 1450 to 1750 amps
10.0 mm (3/8") = 525 to 700 amps	22.0 mm (7/8") = 1700 to 1950 amps
12.0 mm (1/2") = 750 to 925 amps	25.0 mm (1") = 2000 to 2200 amps
15.0 mm (5/8") = 1100 to 1400 amps	-

Weld Setting

Exact weld setting cannot be given because no two jobs are the same. Actual setting will depend upon the job site conditions.

Testing of Welding Stud

At least two studs should be bent in any direction to a 30 degree angle from weld position striking with a 2 kg hammer or bending with a pipe. For deformed bar anchors, bend around a pin the diameter that is equal to twice the diameter of the specimen. If a failure occurs, re-adjust settings and repeat test. Once the set up has been approved, production may be started. It is a good idea to test two or three studs every half hour to assure that the set up has not changed. This can be accomplished by bending several studs to a 15 degree from weld position. If a failure does not occur, the weld should be considered good. It is not necessary to straighten a stud that is bent. Testing should be carried out at the beginning of each day, after may change in operator, or if the set up is changed in any way. Typical fractures in shank and weld failures of stud are shown below in figures.

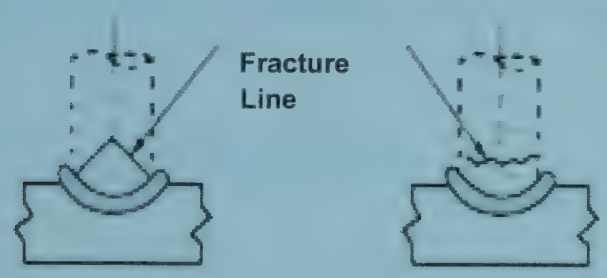

Typical Fractures in Shank of Stud

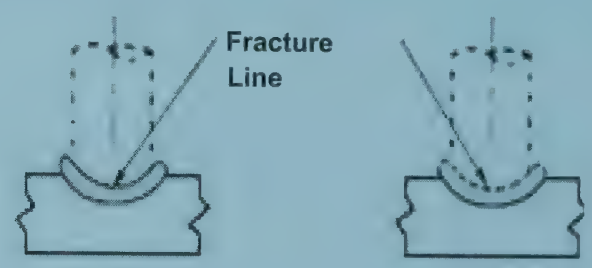

Typical Weld Failures of Stud

Fig. F.2

General Notes:

i) Fracture in weld near stud fillet remains on plate.
ii) Fracture through flush torn from plate.

Welding of Stud Shear Connectors shall include the following brief information:

i) The stud shear connectors shall be welded in accordance with the manufacturer's instructions including pre-heating.
ii) The stud and the surface to which studs are welded shall be free from scale, moisture, rust and other foreign material. The stud base shall not be painted, galvanized or chrome-plated prior to welding.
iii) Welding shall not be carried out when temperature is below 0°C or surface is wet.
iv) The weld shall be visually free from cracks and lack of fusion and be capable of developing at least the nominal ultimate strength of studs.
v) The procedural trial for welding the stud shall be carried out when specified by Engineer.

APPENDIX – G

WELDING CONSUMABLES

The welding electrodes, welding wire, flux, gases, or other consumables proposed to be used for the job shall be confirm to the requirements of the relevant IS specifications or to the job specifications.

The consumables to be used on the job shall be examined to ensure that they have proper levels from the manufacturer confirm to the latest specifications. For important job it is advisable to get a test certificate for each batch of consumables supplied to the user; and to verify that these tests show conformity with the required standards. All consumables shall be stored as recommended by the manufacturer.

Above consumables shall be tested periodically to ensure that the specified quality is being consistently maintained.

Semi-Automatic and Automatic Metal Arc Welding (Covered Electrodes)

This group of process embraces 'gravity' and 'auto contact' welding with long straight lengths of covered electrode and open-arc welding with a continuous covered electrode. The weld metal produced from electrodes used with these process shall have mechanical properties not less than the minimum specified for the weld metal produced by electrodes complying with IS: 814 – 2004, except otherwise specified in the standard for the particular application.

Classification of Coding

Classification of electrodes shall be indicated by the coding system of letters and numerals to indicate the specific properties or characteristics of the electrodes.

It consists of the following letters and numerals and shall be followed in the order stated:

a) A prefix letter **'E'** shall indicate a covered electrode for manual arc welding, manufactured by extrusion process.

b) A letter indicates the type of covering shall be indicated by the following letters: **A = Acid, B = Basic, C = Cellulosic, R = Rutile, RR = Rutile, Heavy Coated, SB = Semi Basic.**

First digit indicates ultimate tensile strength in combination with the yield stress of the weld meta deposited as per **Table G.1**:

Table G.1

Designating Digit	Ultimate Tensile Strength - MPa	Yield Strength – MPa, Minimum
4	410 - 540	330
5	510 - 610	400

Second digit indicates percentage elongation in combination with the impact values of the weld metal deposited as per **Table G.2**:

Table G.2

Designating Digit	Percentage Elongation as Gauge Length – 5.65 $\sqrt{S_o}$, Minimum	Impact Strength – J / ° C, Minimum
For Tensile Range – 410 – 510 MPa		
0	16	No Impact requirements
1	20	47 J / + 27° C
2	22	47 J / + 40° C
3	24	47 J / - 20° C
4	24	27 J / - 30° C
For Tensile Range – 510 – 610 MPa		
0	16	No Impact requirements
1	18	47 J / + 27° C
2	18	47 J / + 0° C
3	20	47 J / - 20° C
4	20	27 J / - 30° C
5	20	27 J / - 40° C
6	20	27 / - 40° C

Third digit indicates welding positions in which the electrodes may be used as per following:

i) All positions;
ii) All positions except vertical down;
iii) Flat butt weld, flat fillet weld and horizontal / vertical fillet weld;
iv) Flat butt weld and flat fillet weld;
v) Vertical down, flat butt, flat fillet and horizontal and vertical fillet weld; and
vi) Any other position or combination of portions not classified above.

Fourth digit indicates the current conditions in which the electrode is to be used as per **Table G.3**:

Table G.3

Designating Digit	Direct Current Recommended Electrode Polarity	Alternating Current Open Circuit Voltage – V, Minimum
0	+	Not Recommended
1	+ or -	50
2	-	50
3	+	50
4	+ or -	70
5	-	70
6	+	70
7	+ or -	90
8	-	90
9	+	90

The additional properties of the electrodes indicated by following letters may be used, if required:

a) Letters **H_1, H_2 and H_3** indicating hydrogen controlled electrodes:
H_1 = Up to 15 ml. diffusible hydrogen.
H_2 = Up to 10 ml. diffusible hydrogen.
H_3 = Up to 5 ml. diffusible hydrogen.

b) Letters **J, K, and L** indicating increased metal recovery, as effective electrode efficiency **(EE)** as per following range according to IS: 13043-1991(R2003).
J = 110 – 129% ; K = 130 – 149% ; and L = 150% and above.

c) Letter **X** indicating radiographic quality.

Dimensions and Tolerances

The size of an electrode shall be designated by the nominal diameter of the core wire expressed in millimeters. Sizes of electrode and corresponding lengths are shown below in tabular form. The tolerance on the specified diameter of core wire shall be ± **0.05 mm**. The tolerance on the specified length of electrode shall be ± **3.0 mm**.

Table G.4

Sl. No.	Size in mm	Length in mm
1	1.60	150.00 or 200.00 or 250.00
2	2.00	200.00 or 250.00 or 300.00 or 350.00
3	2.50	250.00 or 300.00 or 350.00
4	3.15	350.00 or 450.00
5	4.00	350.00 or 450.00
6	5.00	350.00 or 450.00
7	6.30	350.00 or 450.00
8	8.00	350.00 or 450.00

Bare Length

The contact end of the electrode shall be clean and free from covering for enabling it to be gripped by the electrode's holder as specified below in **Table G.5**.

Table G.5

Sl. No.	Electrode Size in mm	Bare Length in mm	
		Minimum	Maximum
1	1.60 to 3.15	15.00	30.00
2	4.00 to 8.00	20.00	40.00

The arc striking end of the electrode shall be bare and permits easy striking of the arc. The distance from the arc end to the first point where the full cross section of the covering prevails shall not exceed as: For all classifications – **1/2 core wire diameter** or **2.0 mm**. whichever is less.

The core wire used for the manufacturer of electrodes shall conform to IS: 2879.

Examples of Electrode Classifications

Example 1: The electrode is a covered electrode having a light rutile covering.

The electrode may be used for welding in all positions and it weld satisfactory on AC with a minimum open circuit voltage of 50 V and on DC with both positive and negative polarity. The electrodes are not designed to give hydrogen controlled weld metal. The electrode is not meant for Radiographic application.

The electrode deposits weld metal with the properties given below in tabular form, when tested in accordance with the standard and when manufacturer submits 8 mm electrodes as the maximum size to be classified. The table of results shows that the manufacturer carried out sets of impact tests at + 27°C, 0°C and - 20°C in order to determine the appropriate classification.

Table G.6

Sl. No.	Property	Electrode Size		Requirement For Class		Remarks
		4 mm	8 mm	EX4XXX	EX5XXX	
1	Ultimate Tensile Strength, MPa	480	465	410 - 540	540 - 610	Satisfactory for EX4XXX but Unsatisfactory for EX5XXX
2	Yield Strength, MPa	365	330 Min	330 Min	400 Min	Satisfactory for both EX4XXX and EX5XXX Class
3	Impact Strength at + 27° C, J (average)	80, 78, 70, 69, 60	72, 69, 65, 64.6, 60	47 Min	47 Min	Satisfactory for both EX4XXX and EX5XXX Class
4	Impact Strength at 0° C, J (average)	65, 58, 50, 50, 49	62, 58, 50, 49, 43	47 Min	47 Min	Satisfactory for both EX4XXX and EX5XXX Class
5	Impact Strength at - 0° C, J (average)	46, 45, 40, 40, 35	40, 37, 33, 32, 30	47 Min	47 Min	Unsatisfactory for both EX4XXX and EX5XXX
6	Elongation, percent At 5.65 √ S_o	26	25	22 Min	18 Min	Satisfactory for both EX4XXX and EX5XXX Class

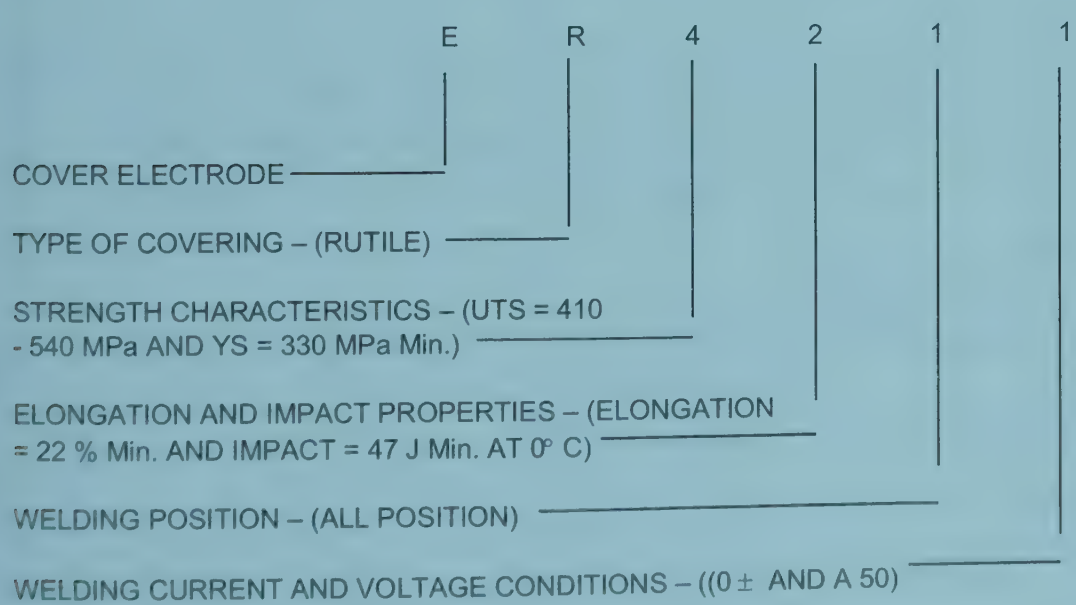

Complete Classification = ER 4211

Example 2: A covered electrode having a basic covering with an increased metal recovery of 120% and depositing weld metal containing 7 ml of diffusible hydrogen per 100 gm of that deposited weld metal.

The electrode may be used for welding in all positions except vertical down and operate on AC with a minimum open circuit voltage of 70 V and on DC with positive polarity. The electrode deposit weld metal gives Radiographic quality weld.

The electrode deposits weld metal with the properties given below in tabular form, when tested in accordance with the standard and when the manufacturer submits 6.30 mm electrodes as the maximum size to be classified. The table of results shows that the manufacturer carried out sets of impact tests at - 30°C and - 40°C in order to determine the appropriate classification.

Table G.7

Sl. No.	Property	Electrode Size		Requirement For Class		Remarks
		4 mm	8 mm	EX4XXX	EX5XXX	
1	Ultimate Tensile Strength, MPa	570	550	410 - 540	540 - 610	Satisfactory for EX4XXX but Unsatisfactory for EX5XXX
2	Yield Strength, MPa	420	400	330 Min	400 Min	Satisfactory for both EX4XXX and EX5XXX Class
3	Impact Strength at - 30° C, J (average)	65, 62, 58, 56.6, 50	55, 52, 46, 40, 37.	27 Min	27 Min	Satisfactory for both EX4XXX and EX5XXX Class
4	Impact Strength at - 20° C, J (average)	30, 24, 21, 20, 16	22, 20, 16, 14, 17.6	47 Min	47 Min	Unsatisfactory for both EX4XXX and EX5XXX
5	Elongation, percent at 5.65 √ S_o	26	25	24 Min	20 Min	Satisfactory for both EX4XXX and EX5XXX Class

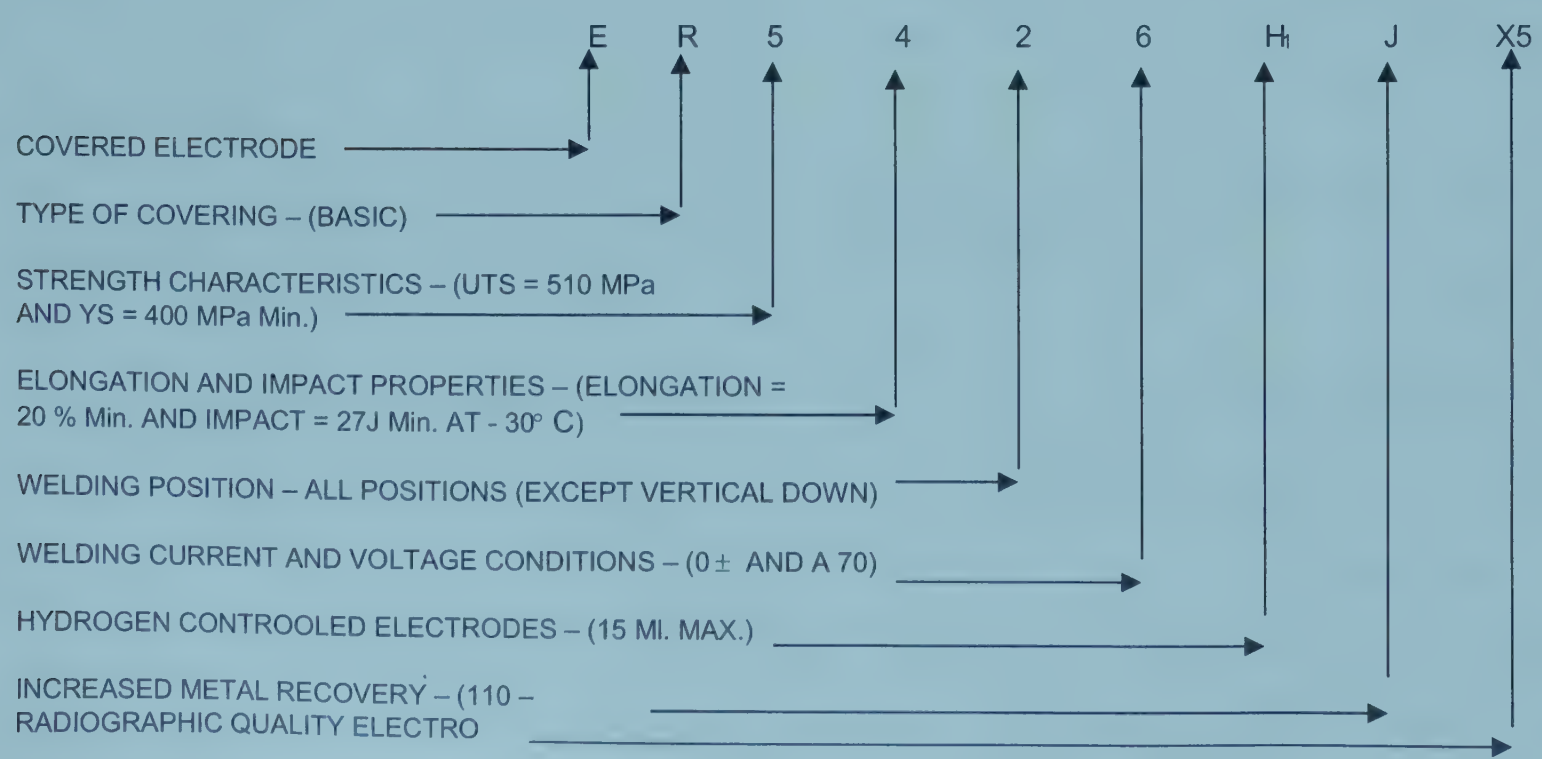

Complete Classification = EB 5426 H_1X5.

Sub-Merged Arc Welding

Electrode wire shall conform to IS: 7280. The electrode wire and flux combination shall satisfy the requirements dictated by factors such as the welding procedure and position and shall comply with the appropriate section of IS: 3613.

Filler Rods and Wires

When a solid metal filler rod or wire is used with a gas shielded process, it shall comply with the requirements of IS: 6419.

Welding Electrodes/Consumables

Welding electrode code is a term that describes the electrode's tensile strength, welding position, flux coating and current.

Mild Steel Coated Electrodes

For an example, say, code – E7018-X, where,
E = Indicates that is an electrode.
70 = Indicates how strong this electrode is when welded i.e. Tensile strength.
1 = Indicates in what welding position it can be used.
8 = Indicates the coating, penetration, and current type used.
X = Indicates that there are more requirements.

Welding Position

1 = Flat, Horizontal, Vertical (Up), Overhead.
2 = Flat, Horizontal.
4 = Flat, Horizontal, Overhead, Vertical (Down).

Note: *Flat Position – Usually Groove Welds, Fillet Welds only if welded like a 'V'.*
Horizontal – Fillet Welds, Welds on walls (travel is from side to side).
Vertical – Welds on walls (travel is either up or down).
Overhead – Welds that needs to be done upside down.

Table G.8

Sl. No.	Class	Electrode Coding	Penetration	Current Type
1	EXXX0	Cellulose, Sodium	Deep	DC
2	EXXX1	Cellulose, Sodium	Deep	AC, DC
3	EXXX2	Rutile, Sodium	Medium	AC, DC
4	EXXX3	Rutile, Potassium	Light	AC, DC
5	EXXX4	Rutile, Potassium	Medium	AC, DC
6	EXXX5	Rutile, Iron Powder	Medium	DC
7	EXXX6	Low Hydrogen Sodium	Medium	AC, DC
8	EXXX7	Low Hydrogen Potassium	Medium	AC, DC
9	EXXX8	Iron Powder, Iron Oxide	Medium	AC, DC
10	EXXX9	Iron Oxide, Rutile, Potassium	Medium	AC, DC

Additional Requirements

Suffix	Additional Requirements
- 1	Increased toughness (impact strength) for E7018 electrodes. Also increased ductility in E7024 electrodes.
- M	Meets most military requirements – greater toughness, lower moisture content as received after exposure, diffusible hydrogen limits for weld metal.
- H4 - H8 - H16	Indicates the maximum diffusible hydrogen limit measured in millimeter per 100 grams (ml / 100g). The 4, 8, and 16 indicates what the limit is. Example: - H4 = 4 ml per 100 grams.

Low Alloy Steel Coated Electrodes

For an example, say, code – E7018-X, where,

E = Indicates that is an electrode.
70 = Indicates how strong this electrode is when welded i.e. Tensile strength.
1 = Indicates in what welding position it can be used.
8 = Indicates the coating, penetration, and current type used.
X = Indicates what alloys are in the electrode.

The grades of electrodes are characterized by improved weldability. Following guidelines are suggested for achieving satisfactory weld joint properties: Use of low hydrogen basic coated electrode with matching strength. Welding electrodes of such specification are suitable for welding of high strength low alloy steels, quenched and tempered steels having **UTS** up to **600 MPa**. The welding type, electrodes etc for different grades are given below in **Table G.9**:

Table G.9

Grades	Welding Type	Electrodes- AWS	Type of Electrodes
250 300	SMAW	AWS 5.1 E 6013	Rutile type, medium coated Electrode
250 300	GMAW	AWS A 5.20 E 71 T-1	Rutile based flux cored wire
350	GMAW	AWS A 5.20 E 71 T-1	Rutile based flux cored wire
350	SMAW	AWS 5.1 E 7018-G	Hydrogen controlled basic coated Electrode
450	SMAW	AWS A 5.5 E 8018-G	Low Hydrogen
	GMAW	AWS A 5.28 E R 80S-G	Low Hydrogen
550 600	SMAW GMAW	AWS A 5.5 E 9018-G ER 110 S-G	Low Hydrogen basic coated

Note: *Welding Position and Classification are same as for Mild Steel.*

APPENDIX – H

WELD DETAILS

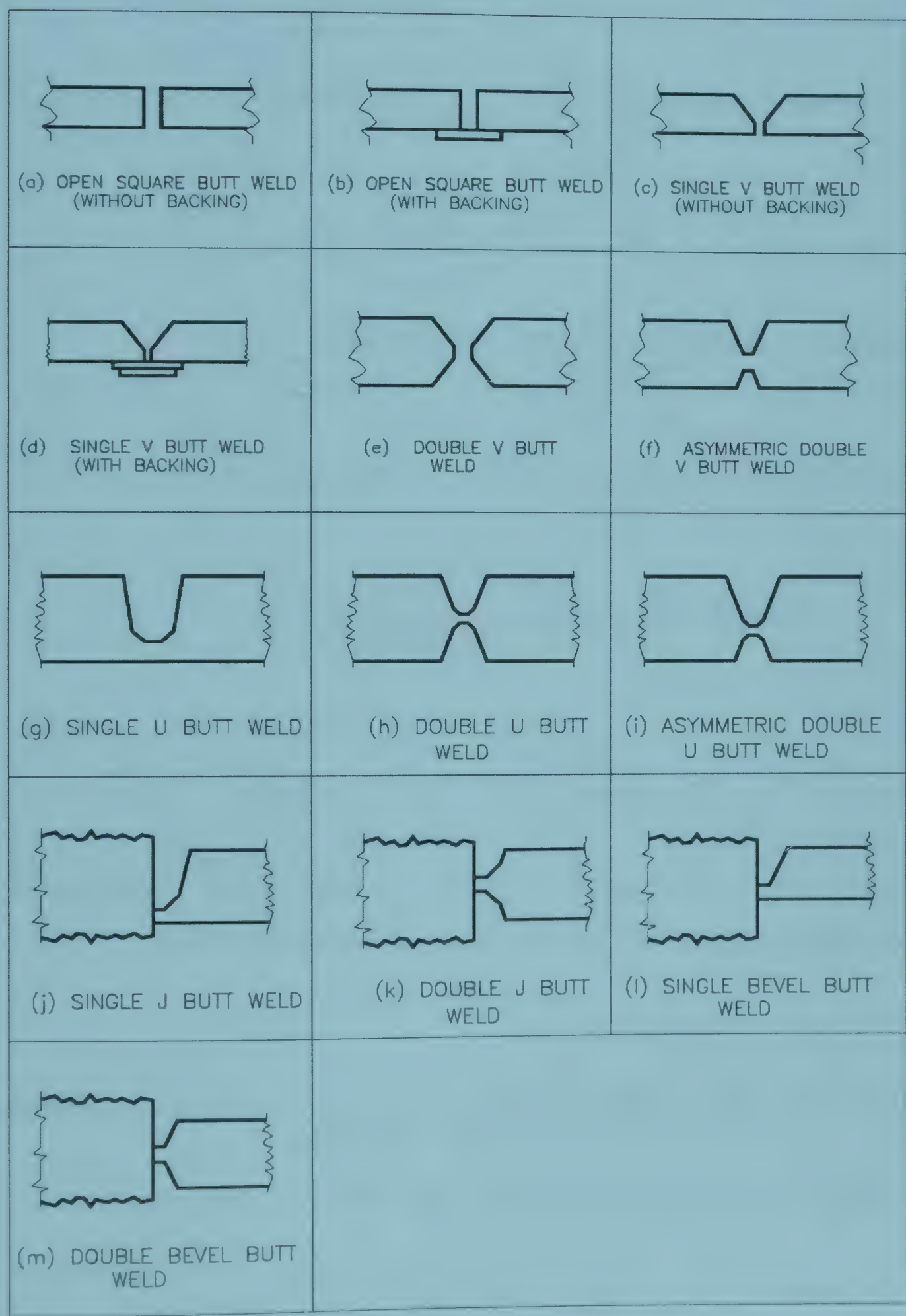

Fig. H-1 Different Types of Butt Weld (Ref. Cl. 5.2)

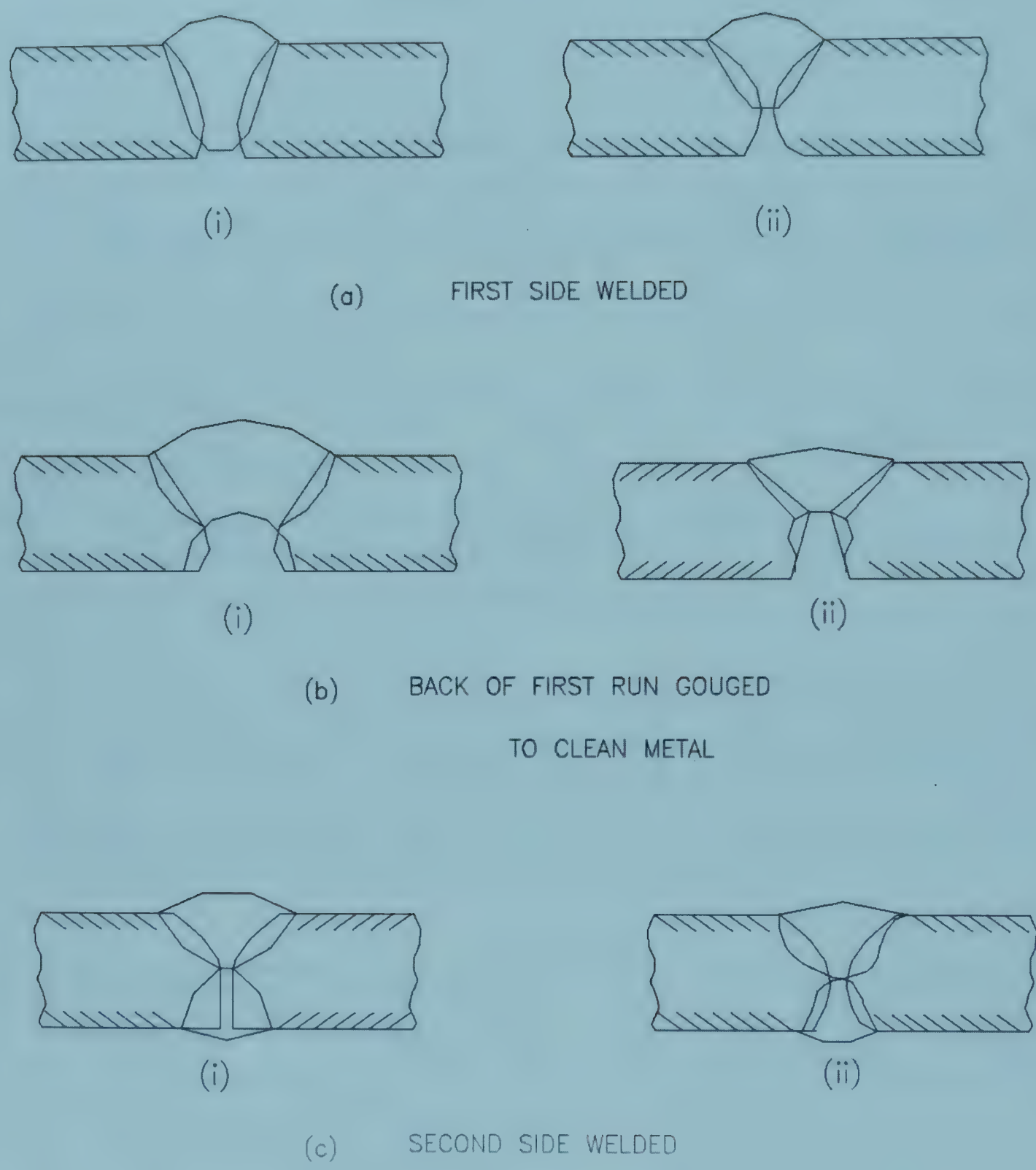

Fig. H-2 Diagrammatic Representation Method of Gouging Out Complete Penetration Butt Joints Welded from Both Sides

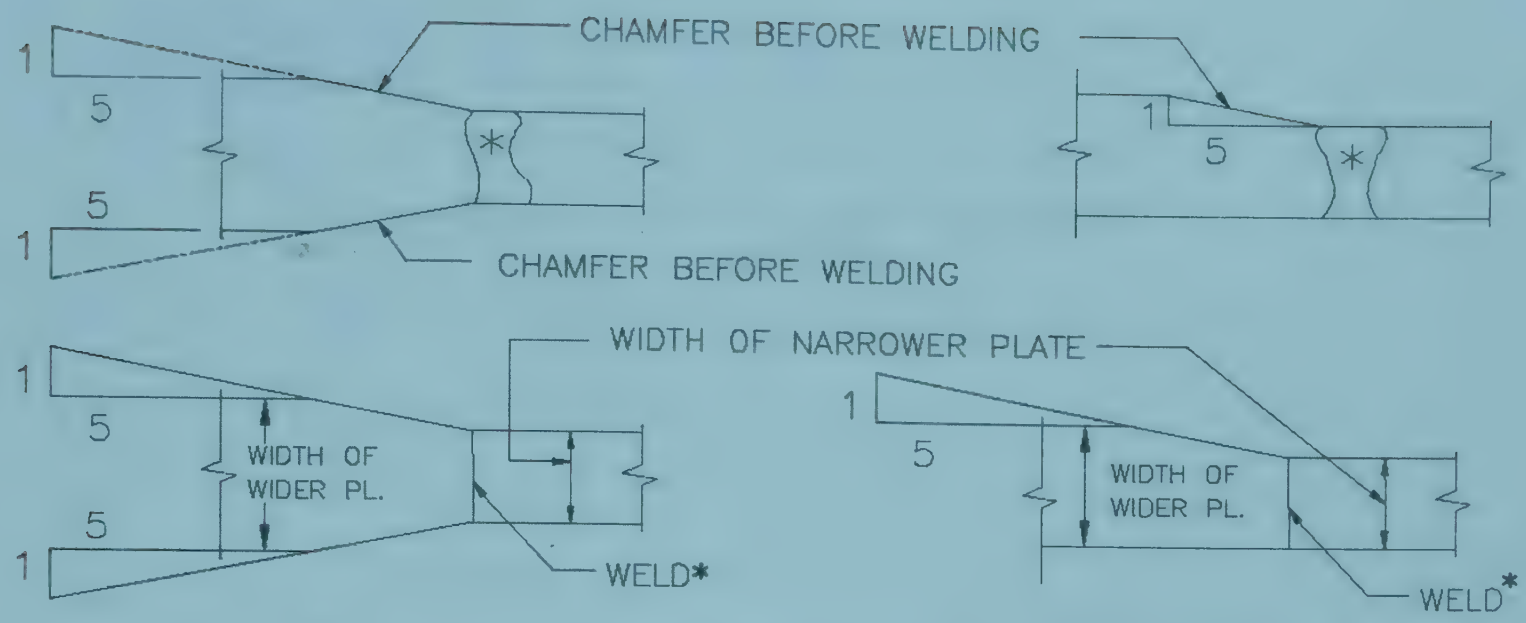

Fig. H-3 Transition by Chamfering Thicker or Wider Part

Fig. H-4 Transition by Sloping Weld Surface

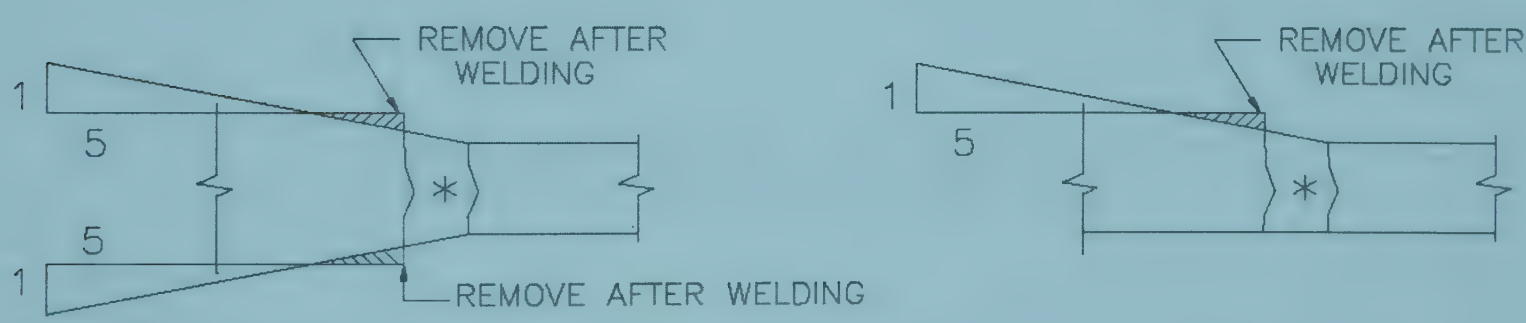

Fig. H-5 Transition by Sloping Weld Surface and Chamfering

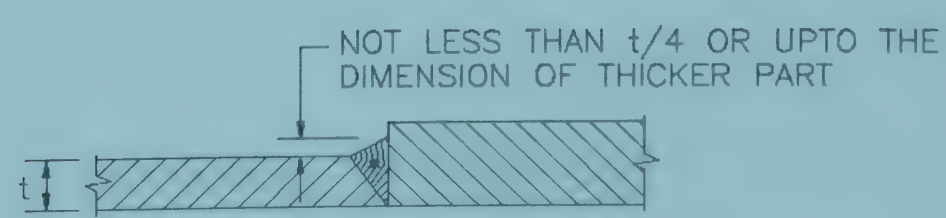

Fig. H-6 Butt Weld Where Transitioning is not Practicable

NOTE:–

1. * WELD MAY BE OF ANY PERMITTED OR QUALIFIED TYPE & DETAIL.
2. TRANSITION SLOPES SHOWN ARE THE MAXIMUM PERMITTED.

BUTT WELDING PARTS OF UNEQUAL CROSS SECTION

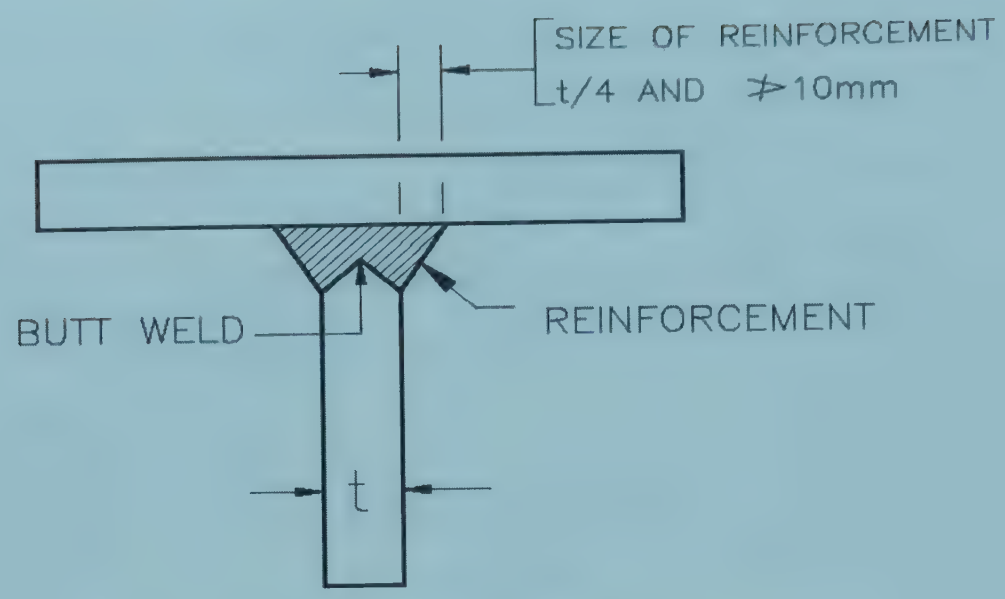

Fig. H-7 Butt Welded T Joint

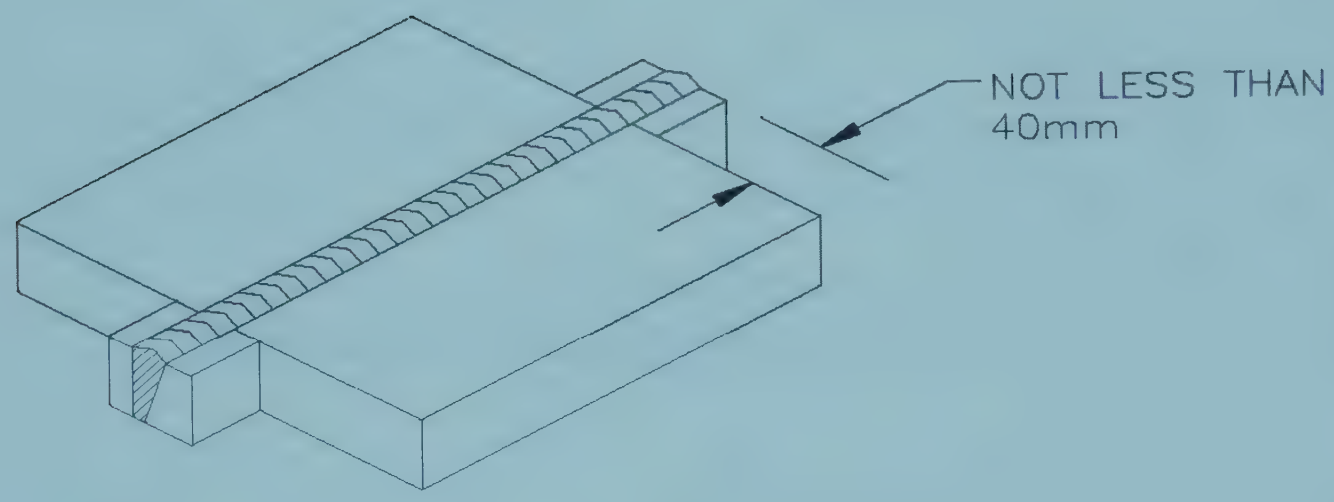

Fig. H-8 Butt Welded Joint With Run-on and Run-off-Plates

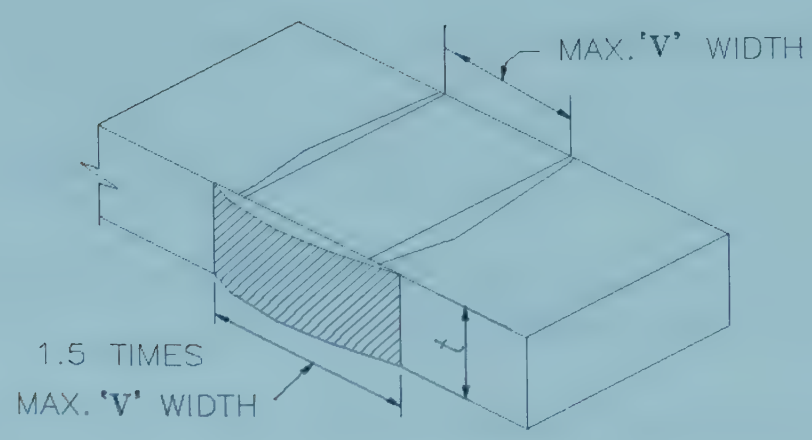

Fig. H-9 Butt Weld End Reinforcement

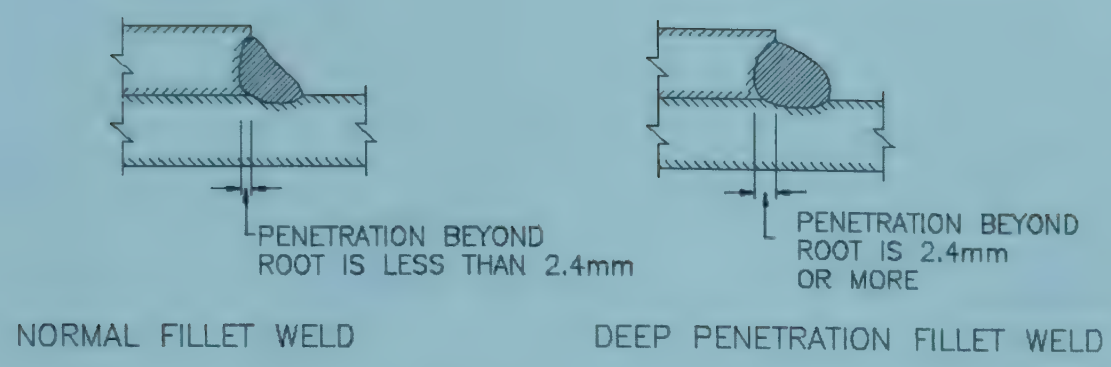

Fig. H-10 Types of Fillet Weld

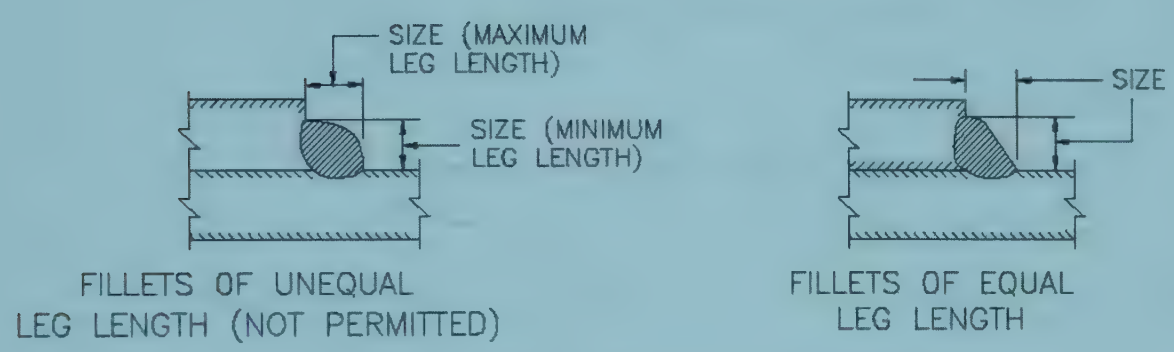

Fig. H-11 Size of Normal Fillet Welds

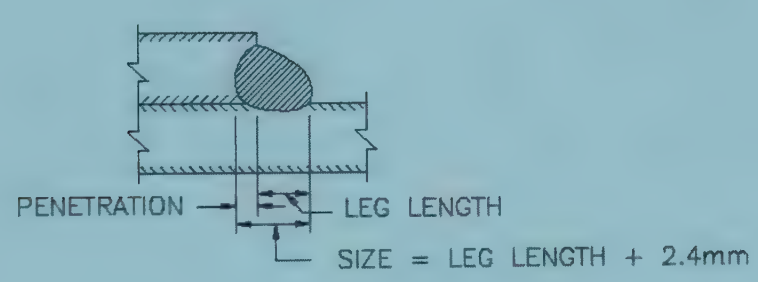

Fig. H-12 Size of Deep Penetration Fillet Weld

ANGLE BETWEEN FUSION FACES	60°–90°	91°–100°	101°–106°	107°–113°	114°–120°
	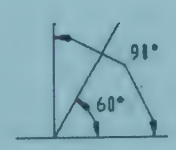		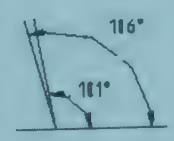		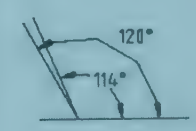
CONSTANT 'K'	0.70	0.65	0.60	0.55	0.50

Fig. H-13

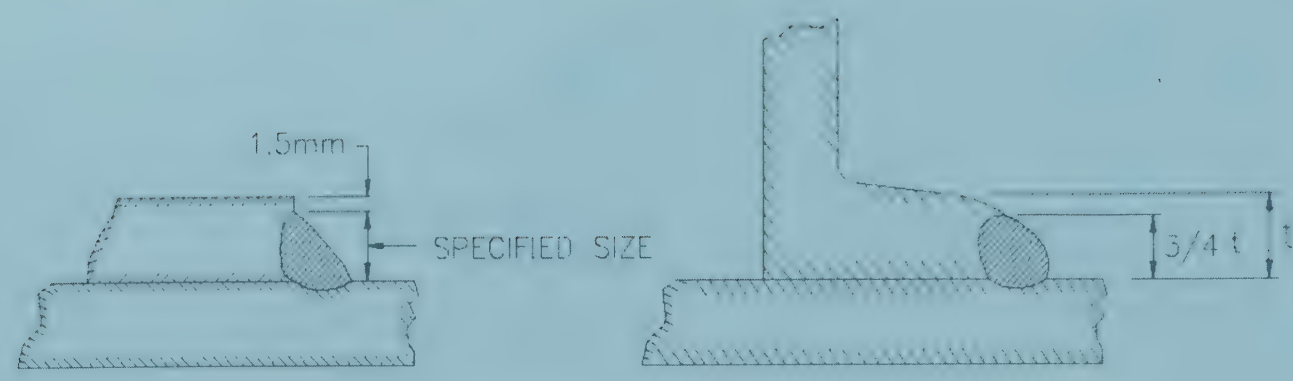

Fig. H-14 Fillet Weld Applied to Square Edge of Plate or Toe of Rolled Section

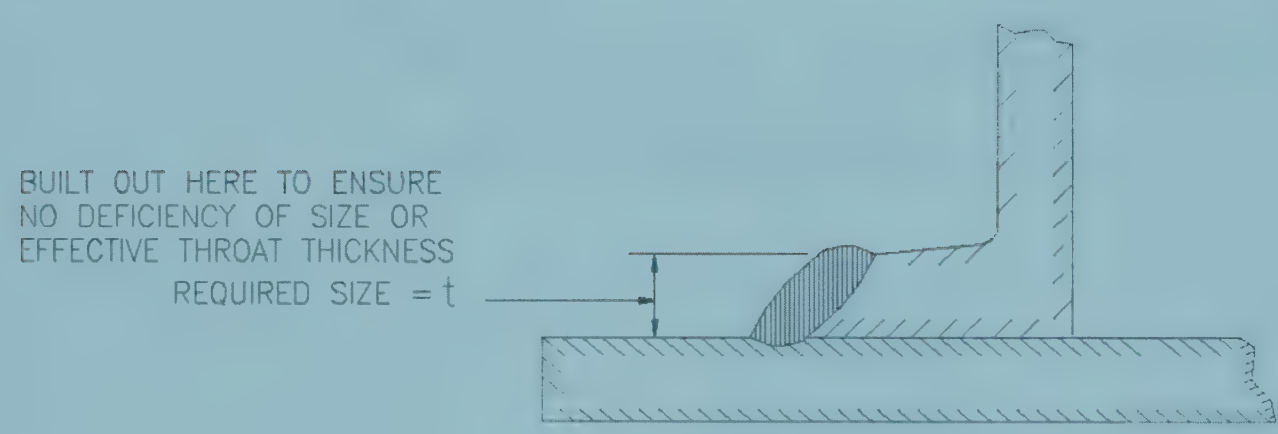

Fig. H-15

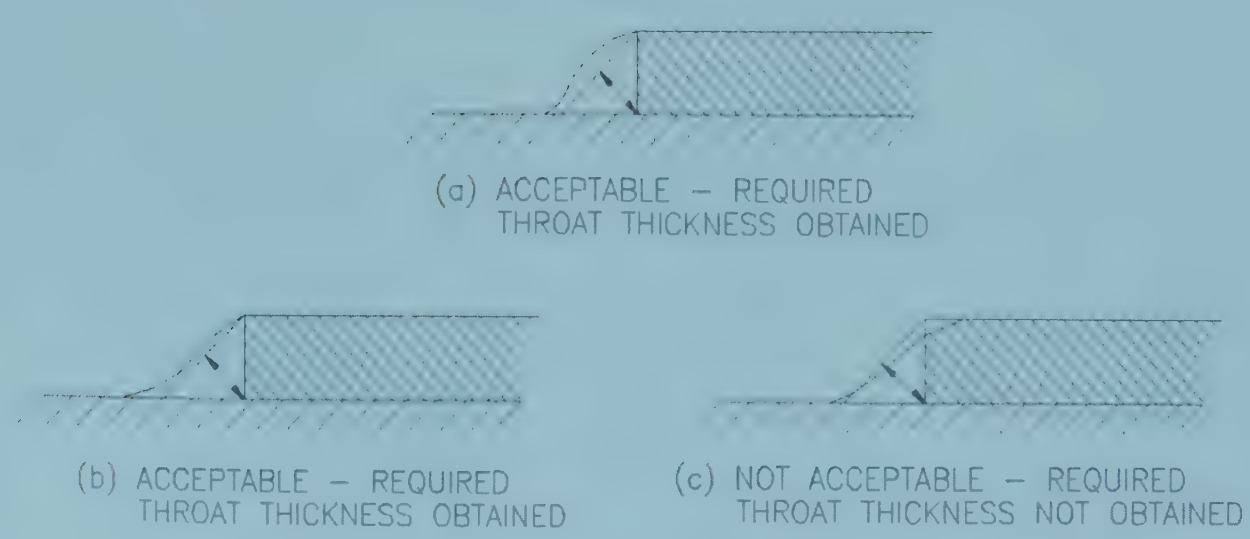

Fig. H-16 Fillet Weld Equal to the Size of Plate or Section

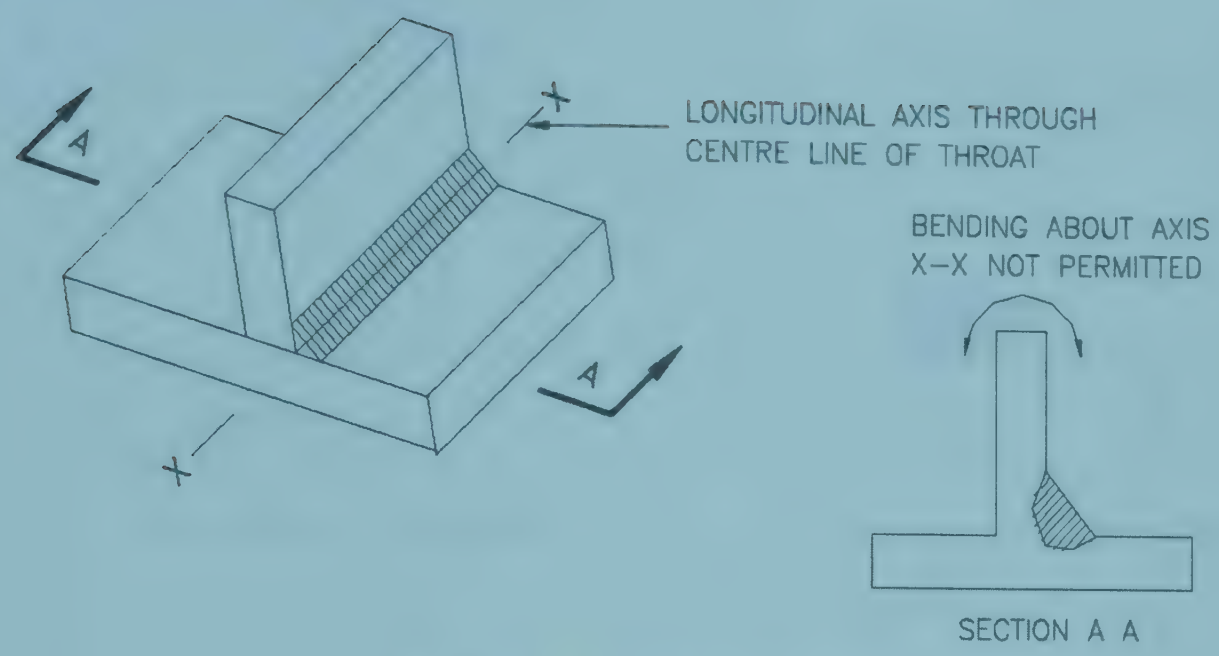

Fig. H-17 Single Fillet Weld Bending

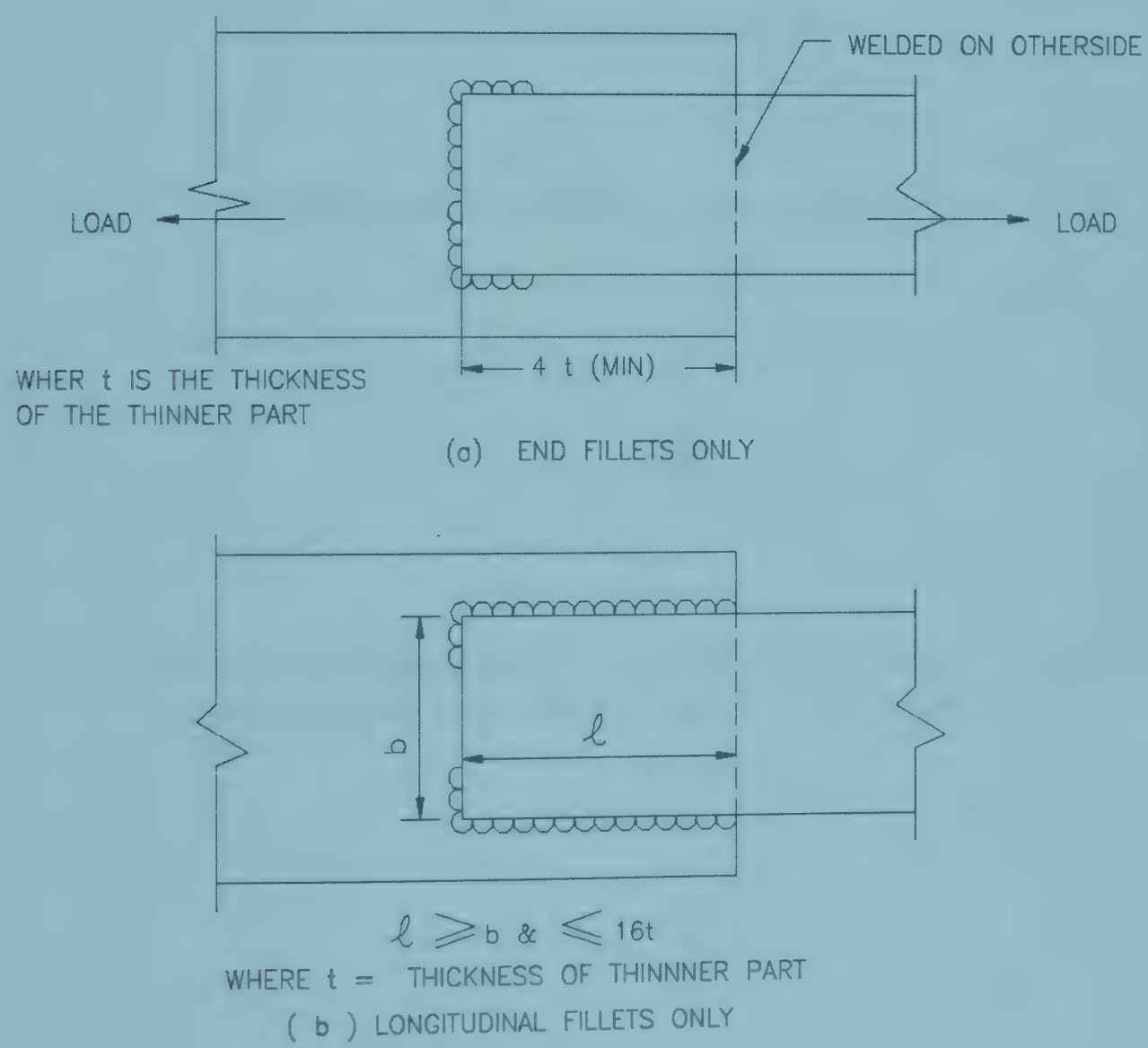

Fig. H-18 Fillet Welds in Lap Joints

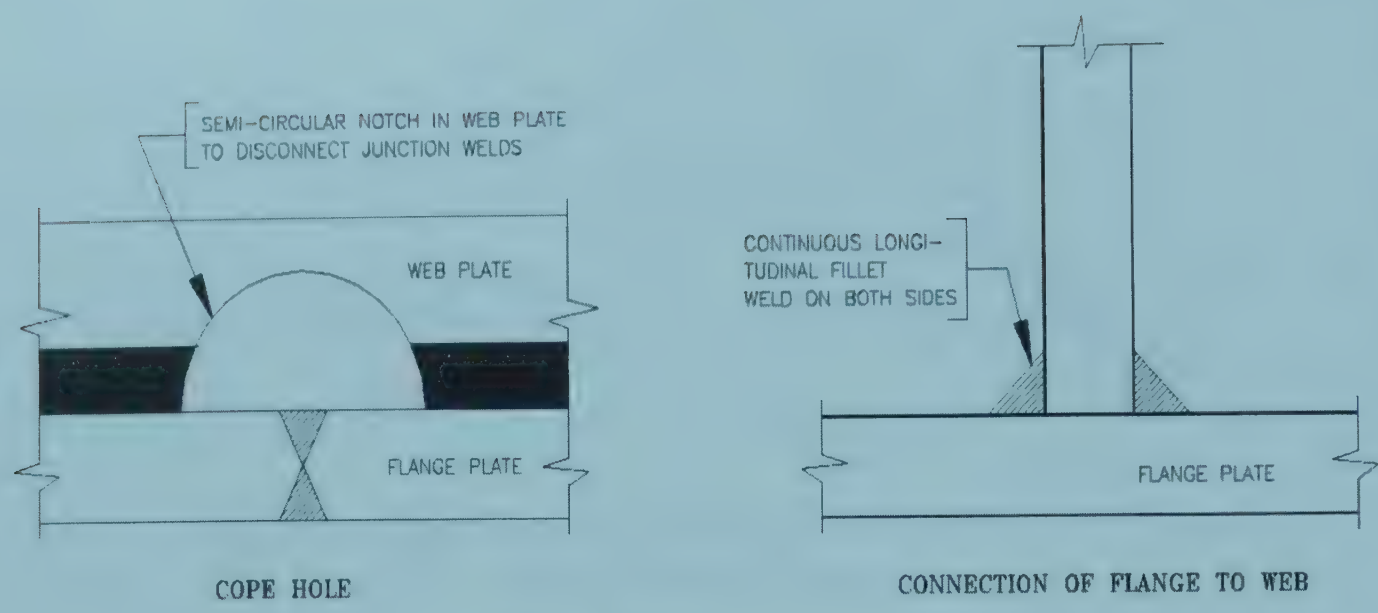

Fig. H-19

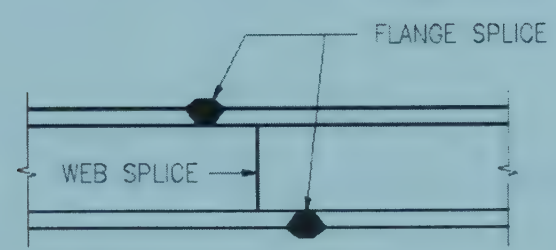

Fig. H-20 Avoiding Accumulation of Weld Joints

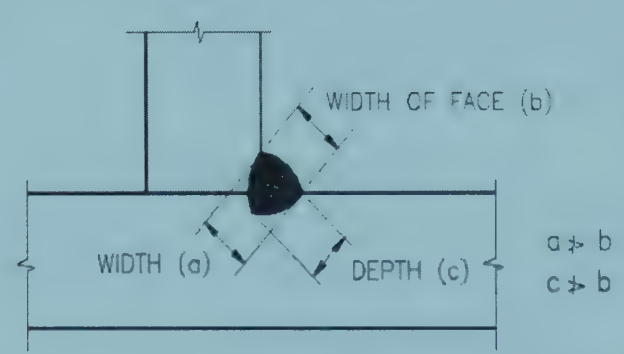

Fig. H-21 Diagram of Weld Pass in Fillet Weld Showing Depth of Fusion Width in Cross Section and Width of Face

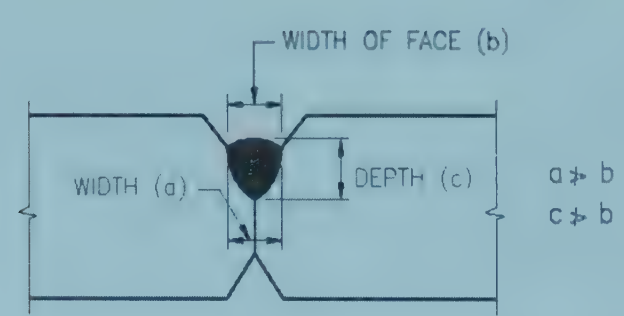

Fig. H-22 Diagram of Weld Pass in Butt Weld Showing Depth of Fusion in Cross Section and Width of Face

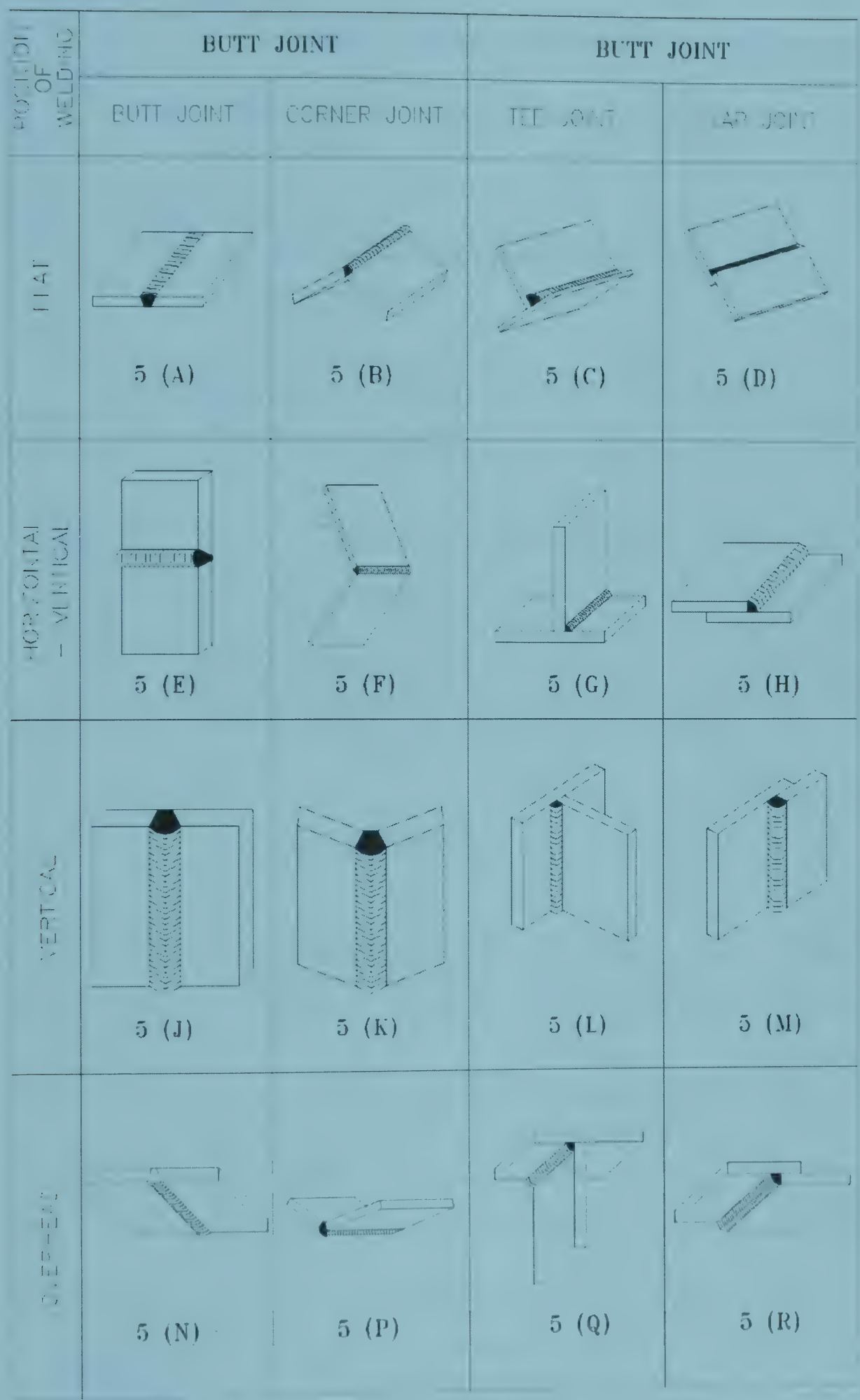

Fig. H-23 Position of Welding
(Ref. Cl. – 23)

ACCEPTABLE AND DEFECTIVE WELD PROFILES

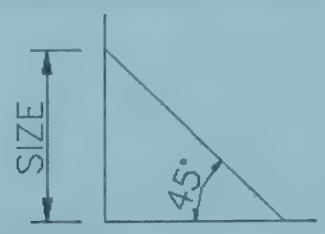

Fig. H-24 Desirable Fillet Weld Profile

Fig. H-25 Acceptable Fillet Weld Profile

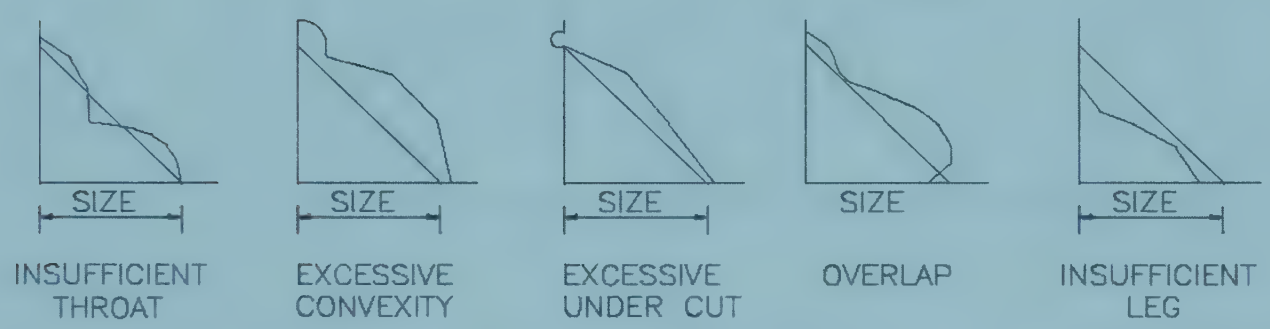

Fig. H-26 Defective Fillet Weld Profile

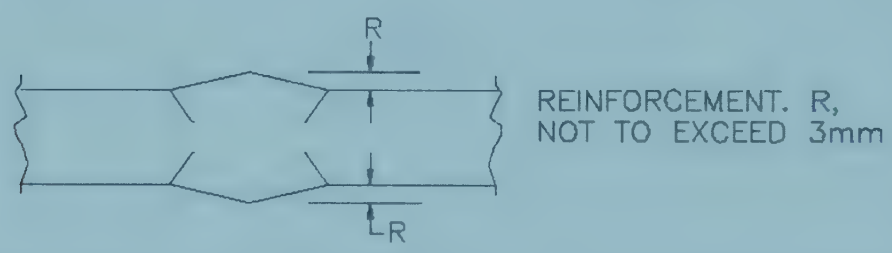

Fig. H-27Acceptable Butt Weld Profile

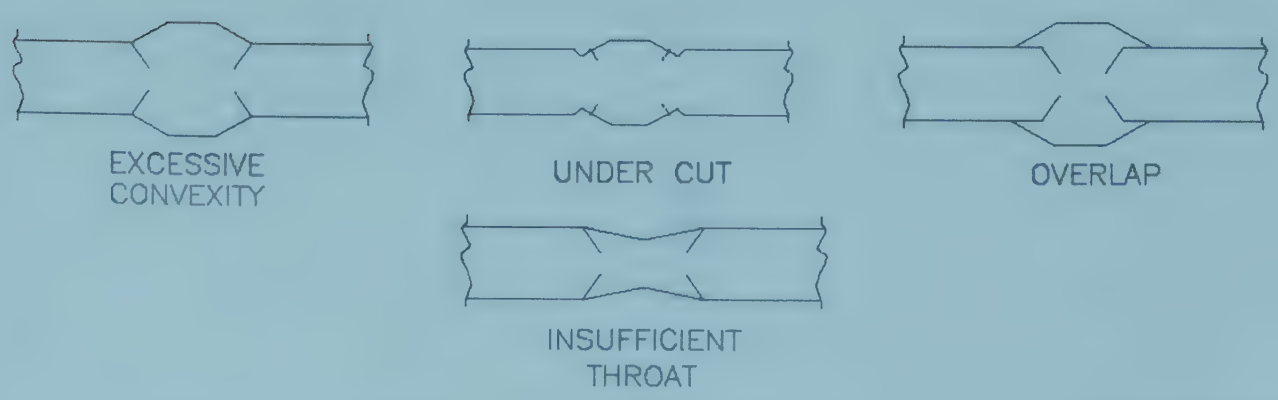

Fig. H-28 Defective Butt Weld Profiles

FILLET WELD GAUGES AND THEIR APPLICATION

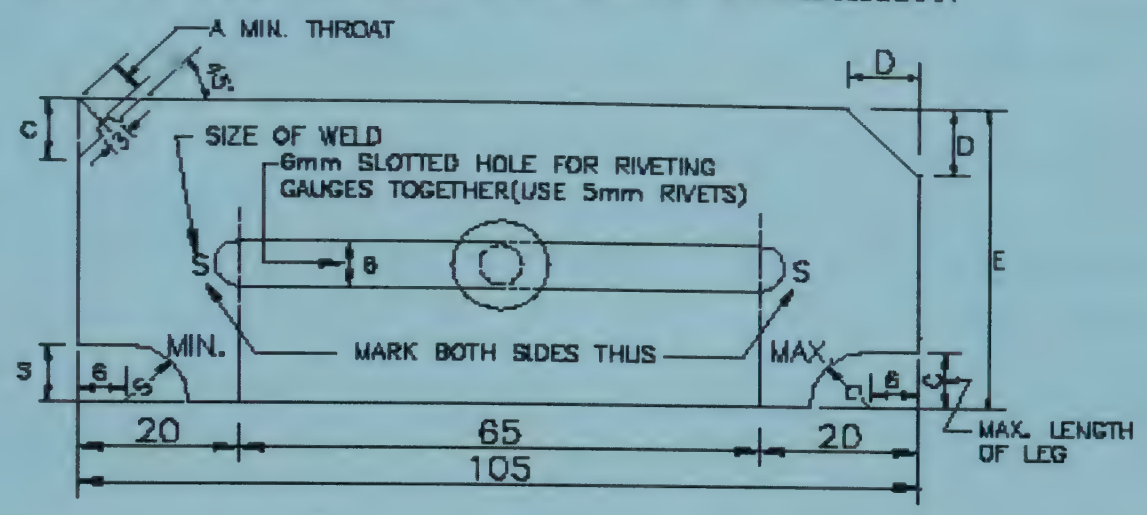

DIMENSION IN mm	WELD SIZE										
	5	6	8	10	12	14	16	18	20	22	25
A	3.5	4.2	5.7	7.1	8.5	9.9	11.3	13.9	14.2	15.6	17.5
S	5.0	6.0	8.0	10.0	12.0	14.0	16.0	18.0	20.0	22.0	25.0
C	6.0	7.0	9.0	11.0	13.0	15.0	17.0	19.0	21.0	24.0	26.0
D	6.7	7.8	10.3	12.4	14.8	17.2	19.3	21.6	23.7	26.3	30.3
E	40.0	40.0	40.0	50.0	50.0	50.0	50.0	50.0	65.0	65.0	65.0

METHOD OF GAUGE APPLICATION

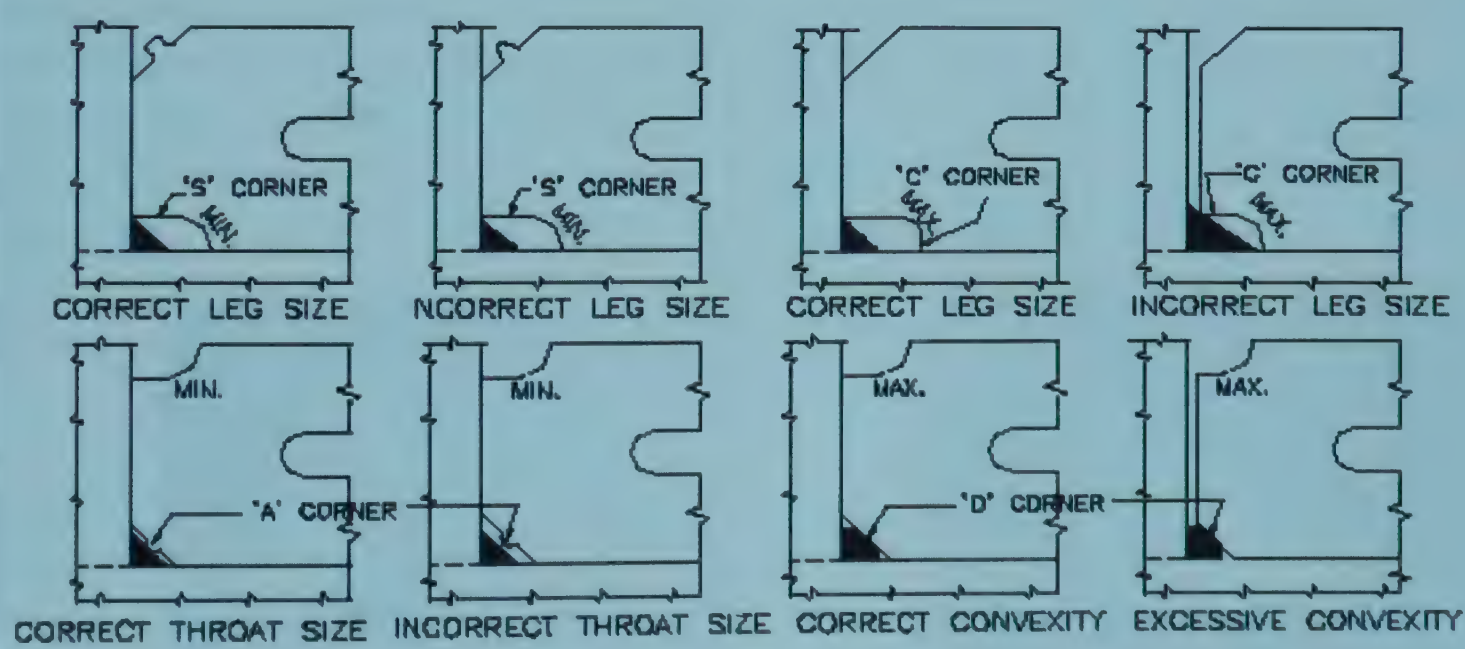

1. ALL DIMENSIONS ARE IN MILLIMETRES.
2. GAUGE FOR EACH WELD SIZE TO BE MANUFACTURED TO THE DIMENSIONS GIVEN IN THE TABLE ABOVE
3. WELD GAUGE SIZE TO BE MARKED AT LOCATION 'S' IN 3mm LETTERS. OTHER MARKING IN 2mm LETTERS
4. ALL MARKINGS TO BE DONE ON BOTH FACES.
5. THESE GAUGES ARE SUITABLE FOR INSPECTION OF NORMAL FILLET WELD OF SIZES 5 TO 25mm WITH ANGLE BETWEEN FUSION FACE OF 90° FOR DEEP PENETRATION WELD AND FOR ANY OTHER ANGLE BETWEEN FUSION FACES, SPECIAL GAUGES MAY BE MADE.

Fig. H-29

APPENDIX – I

NON-DESTRUCTIVE TESTING OF WELDS

Macro Etching Test of Welding

The Macro Etching Test of Weld can provide some excellent feedback especially when it is done immediately after welding while the image of the puddle is still in the welders head.

Macro etch testing allows the inspector to see a cross section of the weld, and see the arrangement of the grains in the parent metal and the weld material. This is known as its macro structure. It can also be show up defects such as porosity, inclusions and poor fusion. It needs minimal equipment to perform a macro etch test.

Firstly, it involves polishing by grinding of the welded joint end. File away any burrs and rough marks, and then use progressively finer grades of emery until a smooth even polish is obtained.

Once prepared, an acid solution is applied with a soft clean cloth, wiping over the weld joint. The acid used is Nitric Acid, dissolves in distilled water. The solution is 10% Nitric Acid, and 90% Water. Nitric acid is used because of its rapid oxidizing properties or a 1:1 mixture, by volume, of concentrated Hydrochloric Acid and Water. After a short time, the parent material and weld area will begin to discolour. If it doesn't, it is possible to clean and re-apply the acid solution. If it discolours too much, it may require re-polishing and re-application of the acid. Once results are visible, the joint is carefully dried.

The results should show distinctive colour difference between the actual weld metal and the parent metal in immediate area as shown below. The weld will show up lighter, and the darker material next to it is the re-arranged grain structure, due to the heating and cooling cycle. In multi-run welds, the one that is done first shows up slightly darker, due to the root run being re-heated during the second run. The images of macro etching test of weld are shown below.

Fig. I-1

Liquid Penetration or Dye Penetration Testing

The Liquid Penetrant test shall be carried out for detection of surface defect in the weld, as per IS: 3658 (R-2005), in addition to visual inspection.

Principle of Test

A suitable liquid penetrant is applied to the surface of the component under examination and is permitted to remain there for sufficient time to allow the liquid to penetrant into any defects open at the surface. After the penetrant time, the excess penetrant, which remains on the surface, is removed. Then a light colored, powder absorbent called a developer is applied to the surface. This developer acts as a blotter and draws out a portion of the penetrant which had previously seeped into the surface openings. As the penetrant is drawn out, it diffuses into the coating of the developer, forming indications of the surface discontinuities or flaws.

Dye Penetrant Inspection (DPI), also called Liquid Penetrant Inspection (LPI) or Penetrant Testing (PT), is a widely applied and low cost inspection method used to locate surface-braking defects all non-porous material.

The surface to be examined and all adjacent areas within at least 25 mm should be dry, free from any dirt, lint, grease, welding flux, weld spatter, oil, and other extraneous matter that could obscure surface openings or otherwise interfere with the examination. The method of cleaning depends on the nature of the material of the part and contaminants. Typical cleaning facilities make use of detergents, organic solvents, de-scaling solution, alkali solutions, paints remover, vapor degreasing, ultrasonic cleaning, abrasive blasting etc.

The penetrant is then applied to the surface being tested. A penetrant liquid, used for flaw detection containing dyes (usually deep red) intended for viewing in normal light. The penetrant is allowed "dwell time" to soak into any flaws (generally 2 to 5 minutes). The dwell time mainly depends upon the penetrate being used, surface being tested and the size of flaws sought.

The excess penetrant is then removed from the welding surface by the cleaning methods stated earlier. The removal method is controlled by the type of penetrant used. When using solvent remover and lint-free cloth it is important to not spray the solvent on the welding surface directly, because this can remove the penetrant from flaws.

After excess penetrant has been removed, a white developer is applied to the weld surface. A material that is applied to the test the surface to accelerate bleed-out and to enhance the contrast of indications is called developer.

Wet developer is a suspension of powder in water or a volatile solvent. It is applied by dipping or spraying and should be agitated before use to ensure uniform disposal of solid particles in the carrier fluid. When developer dries, a film of powder is left on the surface.

With visible dye penetrants, surface defects are indicated by bleeding out of penetrant, which is normally of deep red color, against white background.

Different stages of liquid penetrant process are shown in figures below:

A= Pre-Cleaning

Remove dirt and dust from the surface with remover.

B= Penetrant Application

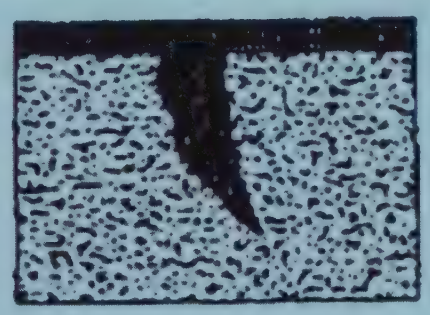

Apply Dye Penetrant and leave it as is for five ten minutes.

C= Penetrant Removal

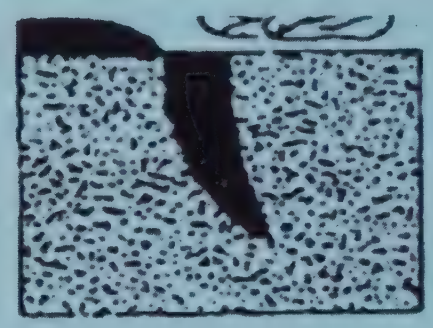

Penetrant Removal excess surface Dye Penetrant with remover.

D= Developing

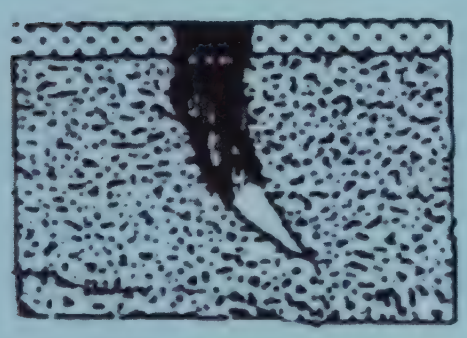

Apply Developer uniformly over the surface.

E = Inspection

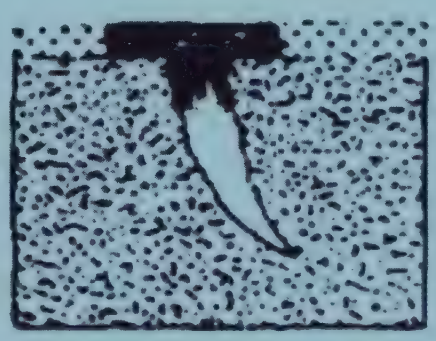

Defects will be found in a bright red indication.

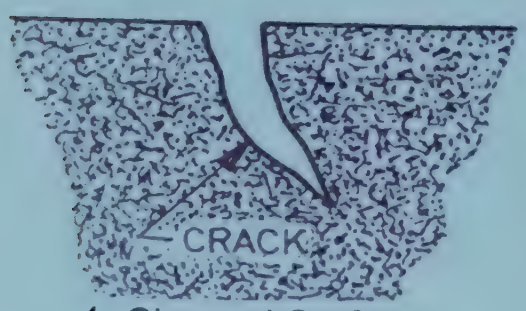

1. Cleaned Surface

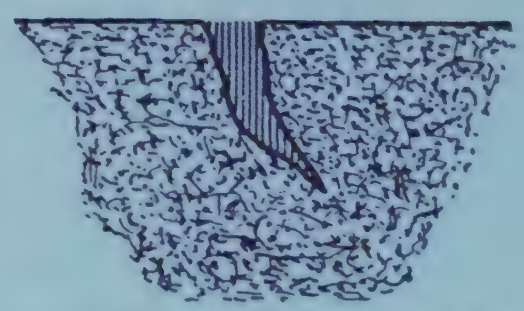

3. Excess Penetrant Removed

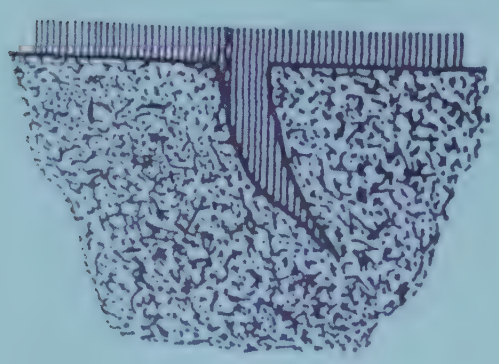

2. Penetrant Covered

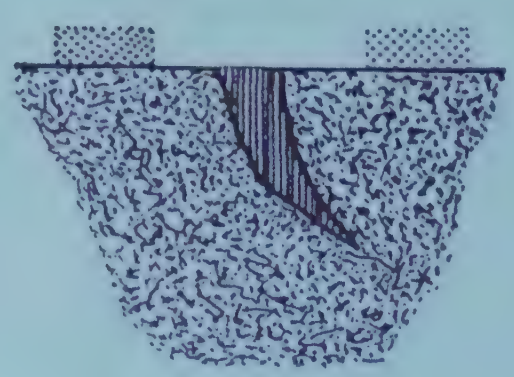

4. Developer Applied

Fig. I-2

Magnetic Particle Test of Welding

Magnetic Particle Test (MPT) shall be carried out for detection of crack and other discontinuity in the weld according to IS: 5334.

Magnetic Particle Testing (MPT) is a Non-Destructive Testing (NDT) process for detecting surface and slightly surface discontinuities in material. It is a very popular, low-cost method to perform NDT of ferromagnetic material. Ferromagnetic is defined as "a term applied to materials that can be magnetized or strongly attracted by a magnetic field".

This method of flow detection consists of magnetizing the weld and the Heat Affected Zone, applying magnetic particles to the surface and observing the particle pattern. The particle retained on the surface due to the leakage field from pattern that is characteristic of the type of flaws present. The method is suitable for surface and sub-surfaces only and is not suitable for deep seated flaws, since the sensitivity decreases sharply with the depth of location of the flaws.

The surface to be examined shall be clean, dry and free from rust, oil, scale, excessive slag and other extraneous matter which may interfere with the sensitivity of examination.

Magnetic particles used for detection of flaws may be of the dry or wet type in either visible (colour contract) or fluorescent form. A suitable instrument, such as magnetic field indicator, should be used, whenever necessary, to establish the adequate magnetic field.

The process puts a magnetic field into the part. The test piece can be magnetized by direct or indirect magnetization. Direct magnetization occurs when the electric current is passed through the test object and a magnetic field is formed in the material. Indirect magnetization occurs when no electric current is passed through the test object, but a magnetic field is applied from an outside source. The magnetic lines of force are perpendicular to the direction of the electric current, which may either alternating current (AC) or some form of direct current (DC).

The prod spacing is usually kept between 150 – 200 mm and not less than 50 mm.

Alternating or half wave rectified magnetizing current shall be used. The current shall be selected as below depending upon the thickness of the jobs being tested:

Table I.1

Thickness Range	Current Requirement Per 25 mm of Prod Spacing
Under 20 mm	90 to 110 amperes
20 mm and over	100 to 125 amperes

Basic principle of Magnetic Particle Testing images are shown in **Fig. 1-3**:

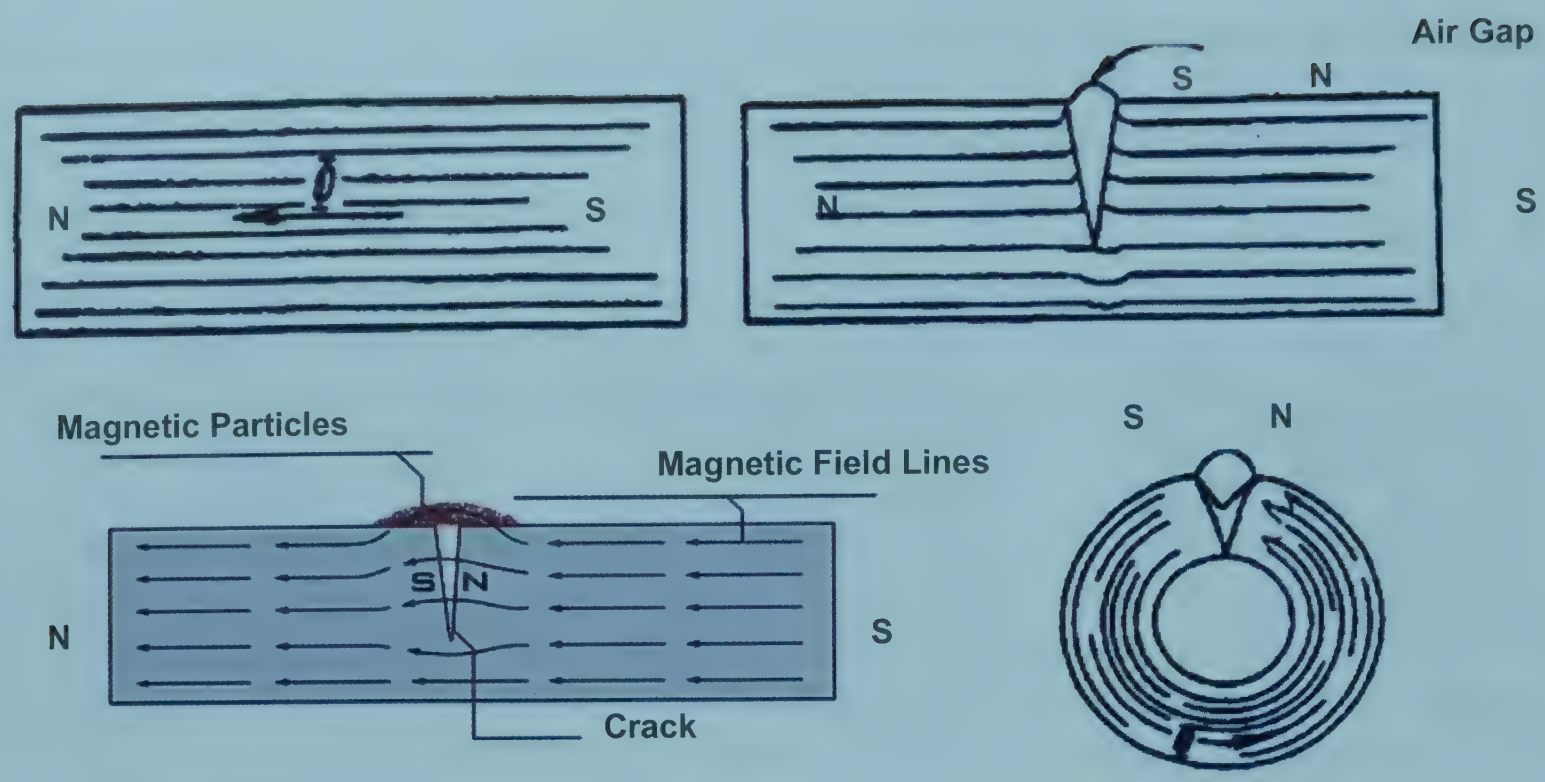

Fig. I-3

This method involves the magnetization of an area to be examined and the application of ferromagnetic particles to the surface. The particles gather at areas of magnetic flux leakage and form indications characteristic of the type of discontinuity detected. Maximum sensitivity is achieved when linear discontinuities are oriented perpendicular to the lines of flux. The AC electromagnetic Yoke technique is restricted to the detection of surface breaking discontinuities.

Ultrasonic Inspection

The ultrasonic inspection in addition to visual inspection shall be carried out for detection of internal flaws in the weld such as cracks, piping porosity inclusion, lack of fusion, incomplete penetration etc. Acceptance criteria shall be as per IS: 4260 or any other relevant IS Specification and as agreed by the Engineer.

Ultrasonic Non-destructive testing, also known an Ultrasonic NDT or simply UT, is a method of characterizing thickness or internal structure of a test piece through the use of high frequency sound waves. Ultrasonic flaw detection has long been the preferred method for non-destructive testing in welding applications. This safe, accurate, and simple technique has pushed ultrasonic to the forefront of inspection technology.

The most commonly occurring defects in welded joints are porosity, slag inclusions, lack of side-wall fusion, and lack of inter-run fusion, lack of root penetration, under cutting, and longitudinal or transverse cracks.

Ultrasonic Inspection is a non-destructive (NDT) method in which high frequency sound waves are introduced into the material being inspected. Most ultrasonic inspection is done at frequencies between 0.5 and 20 MHz, well above the range of human hearing which is about 20 Hz to 20 kHz. The sound waves travel through the material with some loss of energy (attenuation) due to material characteristics. The intensity of sound waves is either measured, after reflection (Pulse echo) at

interfaces (or flow) or is measured at the opposite surface of the specimen (Pulse transmission). The reflected beam is detected and analyzed to define the presence and location of flaws. The degree of reflection depends largely on the physical state of matter on the opposite side of the interface, and to a lesser extent on specific physical properties of the matter, for instance, sound waves are almost completely reflected at metal-gas interfaces. Ultrasonic testing has a superior penetrating power than radiography and can detect flaws deep in the test specimen (say up to about 6 to 7 m of steel. The basic principle of ultrasonic testing images / figures is shown below:

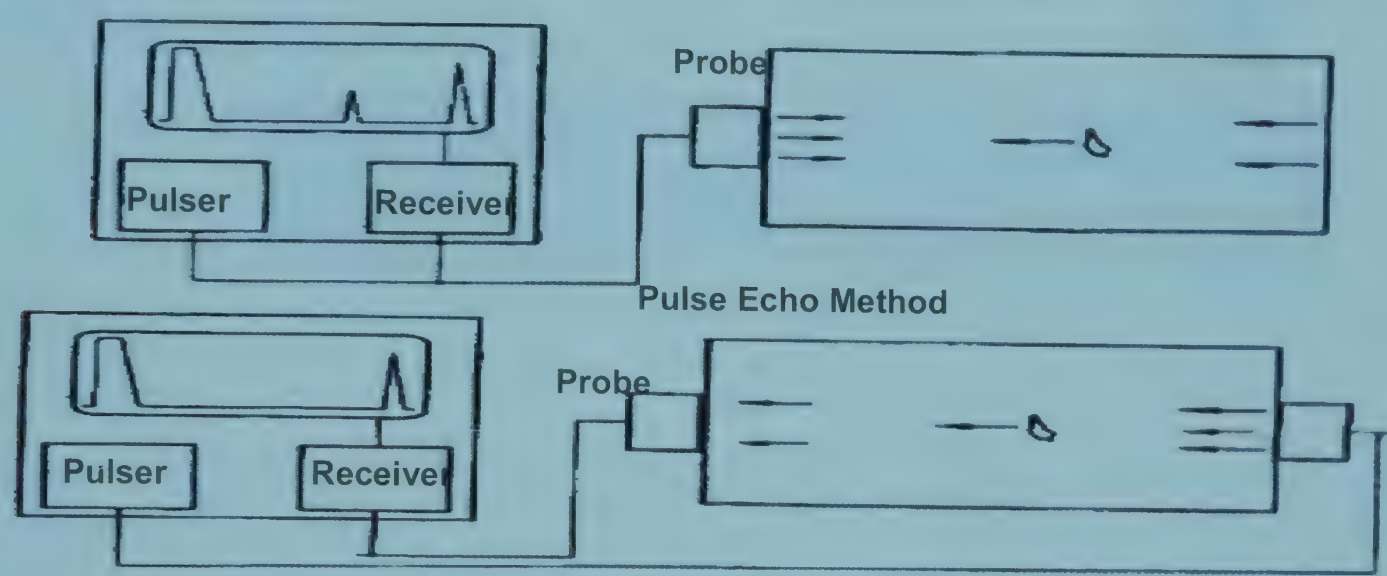

Fig. I-4 Through Transmission Method

The ultrasonic apparatus shall be cable of producing, receiving and displaying high frequency acoustic pulses over the nominal range of 1 to 5 MHz, and shall be of pulse echo reflection type. The ultrasonic instrument and probe shall be capable of being used without difficulty in the temperature range - 10° C to + 50° C.

The ultrasonic instrument shall provide linear vertical presentation within ± 5% of the full screen height from 20 to 80% of the full screen height.

The ultrasonic apparatus shall have an amplitude control, accurate over its useful range of ± 20% of the nominal amplitude ratio to allow measurement of indications beyond the linear range of the vertical display on the screen.

A shear wave probe which produces an angle of 45° to 70° in the examination medium is normally used. The selection of beam angle is dependent on the thickness and geometry of the weld. Probe with a beam angle less than 45° and more than 70° may be used, if the geometry of the weld is more adoptable to the chosen beam angle.

The surface to be subject to ultrasonic testing shall be free from any existing lubricants, dirt, residue, rust and sharp edges, so, to smooth carry on the procedure.

A satisfactory coupling medium, having good wetting properties to permit the transmission of mechanical vibrations between the probe and material under test shall be used. Oil, glycerine, water greases, silicone and white lead paste are among the more commonly used coupling mediums.

Ultrasonic weld inspections are typically performed using a straight beam transducer in conjunction with an angle beam transducer and wedge. A straight beam transducer, producing a longitudinal wave at normal incidence into the test piece, is first used to locate any laminations in or near the Heat Affected Zone. This important because an angle beams transducer may not be able to provide a return signal from a laminar flaw.

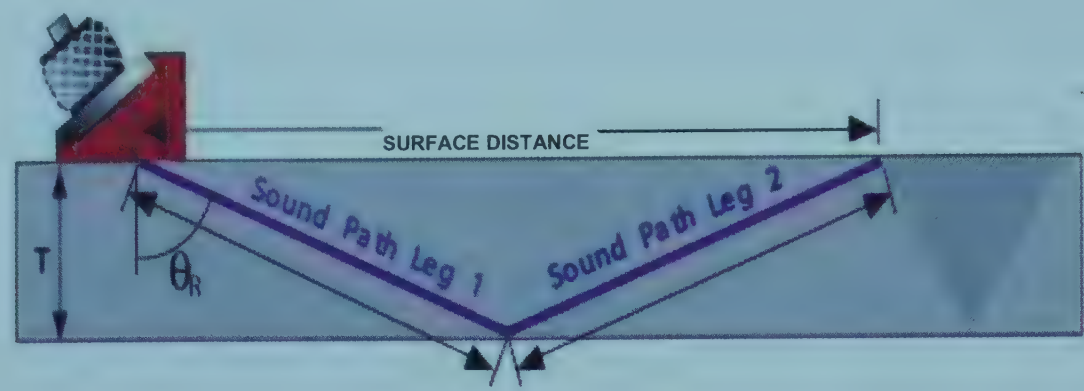

θR = ANGLE OF REGRACTION
T = MATERIAL THICKNES
SURFACE DISTANCE = SIN θR x SOUND PATH
DEPTH (1ST. LEG) = COS θR x SOUND PATH

Fig. I-5

To determine the proper scanning area of the weld, the inspector must first calculate the location o sound beam in the test material. Using the refracted angle, beam index point and material thickness the V-path and skip distance of the sound beam is found. Once they have been calculated, th inspector can identify the transducer locations on the surface of the material corresponding to th crown, side-wall, and root of the weld.

Radiographic Inspection

Radiographic test shall be carried out for detection of internal flaws in the weld such as crack, piping porosity, inclusion, lack of fusion, incomplete penetration etc. This test may be carried out as per IS: 1182 (R-2000) and IS: 4853 (R-2003).
In general, Radiographic Testing is method of inspecting materials for hidden flaws by using the ability of short wavelength electromagnetic radiation (high energy photons) to penetrate various materials. The intensity of the radiation that penetrates and passes through the material is either captured by a radiation sensitive film (Radiography) or by a planner array of radiation sensitive sensors (Real Time Radiography).

This method of weld testing makes use of X-rays, produced by an X-ray tube, or gamma rays, produced by a radioactive isotope. The basic principle of radiographic inspection of welds is the same as that for medical radiography. Penetrating radiation is passed through a solid object, in this case a weld rather that part of the human body, on to a photographic film, resulting in an image of the object's internal structure being deposited on the film. The amount of energy absorbed by the object depends on its thickness and density. Energy not absorbed by the object will cause exposure of the radiographic film. These areas will be dark when the film is developed. Areas of the film exposed to less energy remain.

APPENDIX – J

(Refer Clause 2.13)

HSFG BOLT AND INSTALLATION PROCESS

J.1 Types of Bolts: For the purpose of HSFG connections, only high strength structural bolts can be used. IS: 4000 gives two property classes: 8.8 and 10.9 for the same. Bolts shall conform to IS: 3757. The bolts have the following characteristics:

J.1.1 *Property Class*: A property class has two parts separated by a decimal in the form x.y. The first part, x, indicates 1/100 of the nominal tensile strength in Newton per sq mm and y, indicates ten times the ratio of the lower yield stress and nominal tensile strength. For example, property class 8.8 means that the bolt will have nominal Ultimate Tensile strength of 800 N/mm^2, and lower yield stress of 80% of 800 N/mm^2, i.e. 640 N/mm^2.

J.1.2 *Identification*: The property class of bolts (8.8 or 10.9) shall be embossed or indented as 8S or 10S respectively on the top of head along with the manufacturer's identification symbol. Alternately, marking '8.8 S' or '10.9 S' are also acceptable. The suffix 'S' here denotes that the bolt is high strength structural bolt with a large series hexagon.

Fig. J-1 Typical Marking on Bolt Heads

J.1.3 *Diameter*: IS: 4000 gives diameters of HSFG bolts as M16, M20, M24, M30 and M36. Other sizes given in IS: 1367 include M18, M22 and M27 (Referred to as 'non-preferred' sizes also). For bridge works, these can be used and M22 size is readily available in the market.

J.1.4 *Length*: The length of bolt shall be chosen such as to hold the steel members in position, with provision for the nut, washer(s) and some projection beyond the bolt. Along with the overall length of the bolt, the thread length has to be specified. At least 4 full threads shall remain clear between the bearing surface of the nut and unthreaded part of the shank3 (This means that at least 4 threads shall extend into the members being joined by the bolt). Further, minimum one full thread pitch must protrude from the nut after tightening. The minimum length of bolt shall be worked out on the basis of maximum grip length covering maximum limits of ply thickness plus an additional allowance given in **Table J.1** of IS: 4000. **Table J.1** of IS: 4000 is reproduced on the next page.

Table J.1

Nominal Size of Bolt	Nominal Dia of Bolt	Allowance for Grip in mm
M 16	16	26
M 20	20	31
M 24	24	36
M 30	30	36
M 36	36	48

For M 22 bolts, the allowance for grip shall be 34 mm. Most manufacturers have ready tables for the bolt lengths depending upon the steel plates to be gripped. Still, it will be prudent on the part of the field engineer to cross check the computations before ordering the bolts. Maximum grip length of all plies, including packing's and packing washers, shall not exceed 10 times the nominal diameter of the bolt.

J 1.5 *Surface Finish:* All bolts shall be supplied with coating consisting of phosphate that is used in conjunction with suitable oil of rust preventive type as per IS: 1367 (Part XII).

J 1.6 *Other Types of Bolts*: There are other types of bolts, called twist-off bolts which have an additional stem at the end, which are tightened using double acting torque wrenches and the additional leg twists off when the desired torque is reached. The twist off occurs due to the torque applied and is not a direct indicator of the force in the bolt. For rusted bolts, the value of force in bolt may be appreciably less than that indicated by torque, hence these bolts are not preferred.

J.2 Nut: Each bolt shall be tightened using a high strength nut, conforming to IS: 6623. The nut has to be strong enough to be able to impart the necessary torque to the bolt and also withstand the force during the life of the structure. Further, the threads in nut shall be matching with the threads in the HSFG bolt and the nut shall be free running on the threads of the HSFG bolts.

J.2.1 *Property Class*: Nuts are designated by property class designation, which is equal to 1/100 of the minimum tensile strength in Newton per square mm of the bolt. For HSFG bolts, the property classes to be used are 8, and 10 as specified in IS: 1367 (Part 6), suitable for bolts of property class 8.8 and 10.9 respectively. The nuts shall be hardened and then tempered at a temperature of at least 425^0 C. Normal height of nut shall be more than 0.8 times the nominal bolt diameter.

J.2.2 *Identification of Nut:* The nuts have the following markings:

a) Manufacturer's identification symbol.
b) Property class, marked as '8S' or '10S'. (The suffix 'S' denotes a high strength structural nut with a large series hexagon.) Alternately, '8.8 S' or '10.9 S' are also acceptable.

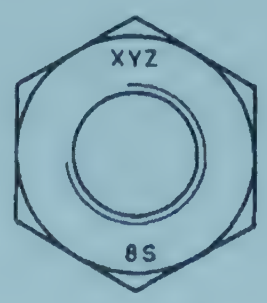

Fig. J-2 Typical Marking on Nuts

The marking shall be either on the top or the bottom face of double chamfered nuts and shall be either indented or embossed on non bearing surface of washer faced nuts.

J.2.3 *Surface of Nut*: All nuts shall be supplied with coating consisting of zinc phosphate that is used in conjunction with suitable oil of rust preventive type as per IS:1367 (Part XII).

J.2.4 *Position of Nut in Bolt:* HSFG bolt cannot be easily opened out except by use of torque wrench. Still, as an additional precaution, it may be ensured that the nut is not easily accessible for opening out by anti-social elements, the same shall be provided preferably as follows:

In girder web: Towards outside of the girder.
In flanges: Towards bottom (Except when in composite construction).
In composite construction: Towards inside of concrete.
In bracing: Towards the rolled section side so that the space for rotation of the nut is not readily available.

Where Tapered washer is used, the nut shall preferably be on the other side.

J.3 Holes for HSFG Bolts: Normal holes in the steel members being connected by the rivets shall be used for HSFG bolts also, subject to the following:

J.3.1 *Making of Holes:* The holes shall be made by drilling only.

J.3.2 *Nominal Diameter of Hole:* The nominal diameter of hole shall be 2 mm more than the bolt diameter i.e. for 20 mm Ø HSFG bolt, the hole shall be 22 mm in diameter.

J.3.3 *Oversize Holes:* In case the bolts are to be provided in existing structure, the maximum size of hole shall not 1.25 d or d + 4 mm whichever is less i.e. for 16 mm Ø bolt, the maximum diameter of hole shall not exceed 20 mm and for 24 mm Ø bolt, the maximum diameter shall not exceed 28 mm.

J.3.4 *Use of Hardened Washers:* In case the hole diameter exceeds the bolt diameter by 2 mm, hardened washer shall be used in place of normal washers.

J.4 Washer: Annular rings which are provided between the bolt head/ nut and the members being joined are washers. Washers for HSFG bolts shall conform to IS 6649. The washers have the following characteristics:

Type A: Plain hole circular washers.
Type B: Square taper washers for use with channels (6^0 taper)
Type C: Square taper washers for use with I-beams (8^0 taper)

J.4.1 *Identification*: Type A washers shall be identified by provision of two nibs (small projections) and manufacturer's identification symbol in indented character. The type B and C washers shall be identified by the type identification symbol, B or C and the manufacturer's identification symbol.

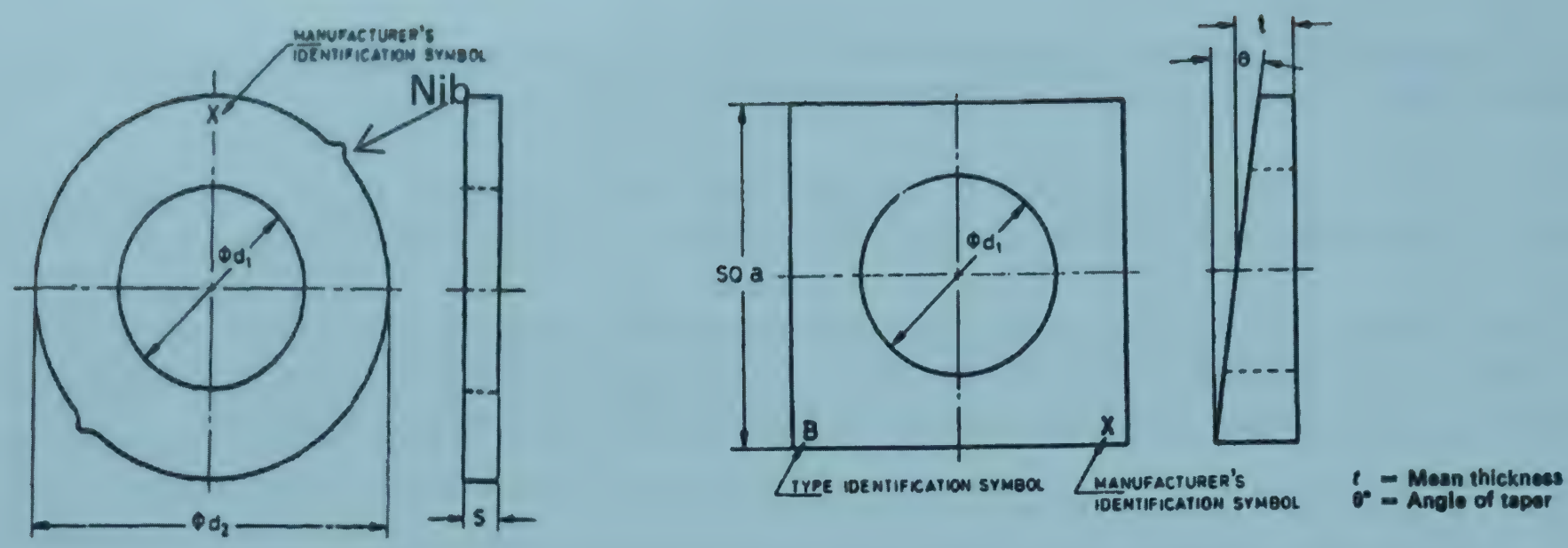

Fig. J-3 Typical Markings/Shapes on Plain & Tapered Washers

J 4.2 *Washer:* HSFG bolts shall be provided with minimum one washer. Normally plain washer is provided. The washer(s) is (are) provided to prevent wear of the steel members being joined and coating thereon during the tightening of bolt. If the bolt is longer than required, packing washers may be used. However, the maximum number of packing washers shall be limited to 3, with maximum total combined thickness of 12 mm. For oversize holes, hardened washers shall be used. These washers are required to prevent punching of the nut in the annular space around the bolt shank.

Note: IS: 6649 specifies only one type of washers, which are through hardened and tempered.

Where the angle between the axis of bolt and the joint surface is more than 3 degree off normal, a tapered washer shall be used against the tapered surface. Non rotating surface shall preferably be placed against tapered washer. All washers (except DTIs) shall be supplied with coating consisting of zinc phosphate that is used in conjunction with suitable oil of rust preventive type as per IS: 1367 (Part XII). All washers shall be flat with a maximum deviation not exceeding 0.25 mm from straight edge laid along a line passing through the center of the hole.

The Direct Tension Indicators are special type of washers with indentations which get pressed when tension is applied. The pressing of indentations to required level indicates that the required tension has been applied in the bolts. Resemblance of DTIs with washers is incidental. In fact, these are precision engineered mechanical load cell which is the reliable method for checking HSFG bolt tensioning. As shown in **Fig. J-4**, DTIs have multiple projections, between which the feeler gauge is to be inserted to check if the bolt has been sufficiently tightened or not. Complete closing of the projections, however, may indicate either over tightening or poor quality material in DTI.

DTIs are very good method of ensuring that the bolts are tightened properly, and this method of tightening shall be preferred over the method with plain washers. The DTIs normally are patented products and shall be supplied preferably with zinc phosphate coating, but alternatively can be with any other corrosion prevention treatment given to the surface as specified by the manufacturer. These shall normally be provided below the head of the bolt (with projections towards bolt head) in case nut is rotated. In case the bolt is to be rotated, DTI shall be provided under nut (with projections towards nut) and in this case, an additional washer shall be provided on the DTI side to protect the

protrusions from damage due to the abrasion during bolt tightening. Measuring the amount by which the indentations have been pressed indicate if the bolts have been tightened to the desired tension level.

The DTIs used shall be the ones which are compatible metallurgically and also suitable for the bolts of property class 8.8 and 10.9. Suitable markings identifying the bolt manufacturer, property class of DTI and its diameter shall be engraved suitably on the DTI. Action of DTIs is as indicated below:

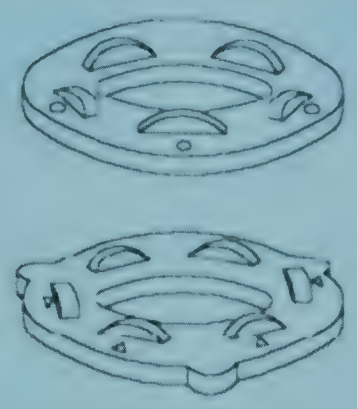

Fig. J-4 Direct Tension Indicator Washers

There are other proprietary tension indicators such as those having squirting action in which material squirts off and those having rubber projections which shear off when required tension load is applied. These tension indicators have not been considered in these guidelines.

Each bolt of property class 8.8 shall have minimum one plain washer, which shall be provided in the part being rotated. Mostly the nut is rotated, but if space constraint is there, the reverse is true.

For class 10.9 bolts, two washers shall be provided, one against head and one against the nut. The two washers are required in this case because of very high tension is imparted to the bolt, which can damage the steel members.

One DTI shall be used in one bolt. In case DTI is being provided, the same will count as one washer and in class 10.9 bolts, one DTI and one plain washer shall be provided. In class 8.8 bolts only one DTI washer needs to be provided. If the nut is rotated, the DTI shall be provided under the head, and if the head is rotated, the DTI is to be provided under the nut. If DTI is used under the nut, washer faced nut as per IS : 6623 shall be provided.

J.5 Surface Preparation for Steel Interface before providing HSFG Bolts: The steel interface between the plies which form a joint having HSFG bolts shall have special surface preparation so that sufficient slip factor is available. The following surface preparation shall be done.

J.5.1 The interface between the plies which are connected together by the HSFG bolts shall be "Aluminium metalized without any over coating". The aluminium metalizing shall have a nominal thickness of 150 μm.

J.5.2 The interface of plies in old structures which are to be replaced by the HSFG bolts shall be cleaned by wire brushing/ flame cleaning. The surfaces shall be cleaned to remove all loose rust

and paint layers (Only isolated patches of coatings/ rust can remain). If, however, in existing structures, rivets are to be replaced by bolts but no surface preparation is possible, the slip factor shall be suitably reduced.

J.6 Installation of Bolts: The HSFG bolts work on the principle of applying a specified pre-load on the joint such that the plies in the joint are joined together without any gap. The tightening of HSFG bolts is to be done at stress level which is beyond the yield point, i.e. the plastic flow of material shall take place. This is important because the yield point of bolt material is well defined and after this level, the strain increases without increase in stress, as shown in **Fig.J-5** below.

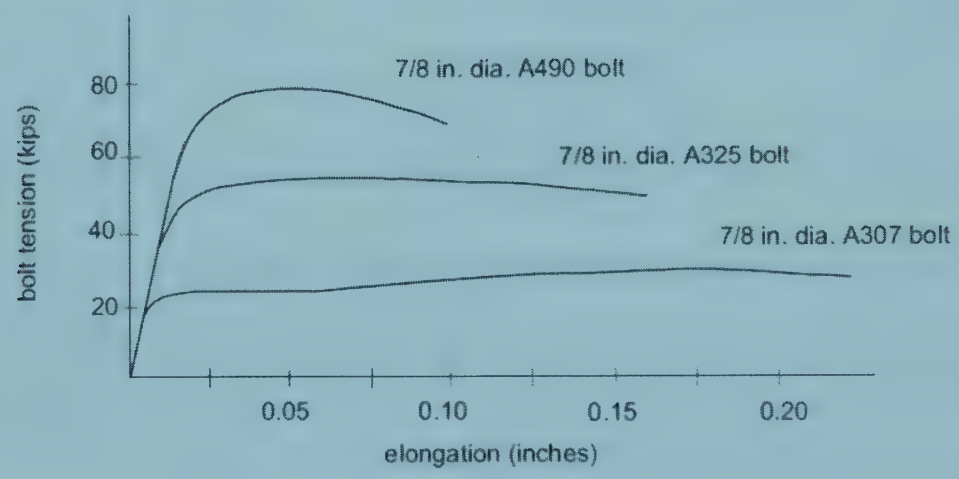

Fig. J-5 Tension – Elongation Screw

The bolt shall be tightened to minimum loads specified in IS: 4000. For bolts subject to only tension, the force shall be as specified in Table-2 of IS: 4000. For other joints, the same shall be as per Table 3 of IS: 4000, reproduced below (**Table J.2**).

Table J.2

Nominal Size of Bolt	Minimum Bolt Tension in kN for Bolts of Property Class	
	8.8	10.9
M 16	94.5	130
M 20	147	203
M 24	212	293
M 30	337	466
M 36	490	678

For M 22 bolts, which are non-standard as per IS codes, the minimum bolt tension shall be 182 kN for class 8.8 and 251 kN for property class 10.9.

The holes shall be brought in alignment by using drifts etc. such, that the bolt threads are not damaged during insertion of bolts. Drifting shall not distort the metal or enlarge the holes. The members being joined shall be held in position by insertion of few HSFG bolts (tightened to first stage only). These bolts shall not be tightened to second stage till all the bolts in a joint are inserted and tightened to first stage **(Fig. J-6)**.

Fig. J-6 Installation of HSFG Bolts

The bolts shall be inserted and tightened up to first stage of tightening. The drifts inserted as above shall also be removed one by one. The final tightening shall not proceed until the gap between the plates has been closed such that the residual gap, if any, is less than 2 mm at edges. There shall, however, be no gap in the central portion. In case the central portion is not in close contact or gap at edges is more than 2 mm, straightening of members may be done after opening out the bolts inserted and the entire procedure i) to iii) above shall be repeated. During tightening of bolts also, the steel members can continue to deform and hence the tightening of subsequent bolts can lead to loosening of already tightened bolts. In order to minimize the loosening of already tight bolts, tightening in the two stages shall be done starting from the stiffest part to the free edges. Stiffest parts of joint are generally towards the center of the joint.

J.7 Procedure for Installation of HSFG Bolts Using Direct Tension Indicator: This is the preferred method of installation of HSFG bolts.

Calibration of Direct Tension Indicator: Before the DTI are brought to site, the same shall be tested in the presence of engineer. Three numbers of bolt of similar diameter and property class, as shall be used in the work, shall be taken and installed with DTI. The installation procedure to be followed shall be similar to the one given for plain washers. On full tightening, the projections on DTI washers shall meet the requirements of checks specified after second stage tightening using DTIs. Only the DTIs which satisfy the calibration shall be brought to site for work.

As a first stage, all bolts in the joint shall be tightened to 'snug tight' condition. Snug tight condition means the nut is tightened using an ordinary wrench by an average worker, applying maximum force on the wrench. This stage is required to bring the plies in close contact. After first stage of tightening, the joint shall be checked to see if the plies are in close contact and the clearances are not exceeded.

During the second stage of tightening, torque wrench is used to tighten the bolts until the indentations on the DTI indicate full tightening feeler gauge of 0.40 mm thickness shall be used to check 100% of the bolts for proper tightening. The feeler gauge shall be used to determine if the bolt has been sufficiently tightened, as reproduced in **Table J.3**:

Table J.3

Number of Indicator Position in DTI Washer	Minimum Number of Feeler Gauge Refusals
4	3
5	3
6	4
7	4
8	5
9	5
No more than 10% of the indicators in a connection bolts group shall exhibit full compression of the indicator	

The procedure for checking the proper tightening of bolt using DTI is shown in the in the **Fig. J.7**.

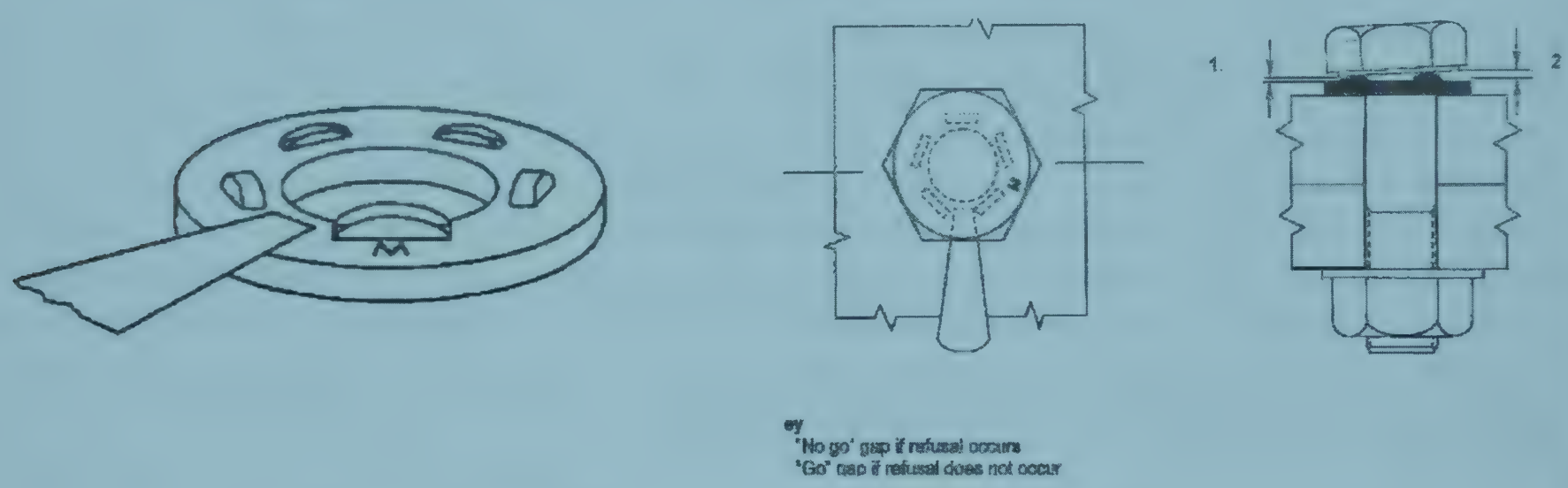

Fig. J-7 Method of Checking the Correct Tensioning using DTI

The total number of indicators in a bolt connection shall be counted and it shall be ensured that not more than 10% exhibit full closure i.e. zero gap after tightening.

In the first stage, a calibrated wrench with an accuracy of ± 10% shall be set to 75% of the torque computed for the complete tightening of the bolt. All the bolts in the joint shall be tightened to this torque. After checking all bolts after the first stage, permanent marks shall be made with suitable marker on the bolt as well as nut to indicate the relative position of the two. The mark shall be such that the same shall be visible for inspection up to 1 year after the date of installation.

The steel members that make up the plies of the joint with HSFG bolts shall be checked for proper contact. 10% bolts shall be checked with a separate calibrated wrench set at 75% of the proof load for the bolt and bolt turning by more than 15 degrees during the test, shall be reworked. If the loose bolts thus found are more than 5 but less than 1% of the total, another 10% of the bolts shall be checked. If the total loose bolts thus found exceed 1% of the total, the torque wrench shall be calibrated afresh and the entire lot shall be checked for tightness. The bolts shall be turned by a further amount as specified in **Table J-4**.

Table J.4

Total Nominal Thickness "t" of Parts to be Connected (Including all Packing and Washers) d = Dia do Bolt	Further Rotation to be Applied, during the Second Stage of Tightening	
	Degrees	Part Turns
T < 2 d	60	1/6
2d ≥ t < 6d	90	1/4
6d ≤ 10d	120	1/3

After the second stage of tightening, 100% bolts shall be checked and certified to have been turned through the requisite amount by verifying the permanent marks on the nut and the bolt. 1% of the bolts, subject to minimum of 10 per size of bolts shall be checked for gross under-tightening as per procedure given in **Annexure-D** of IS: 4000.

J.8 Re-Tensioning of Bolts: The HSFG bolts are tightened beyond yield stress level and undergo plastic deformation once tightened fully. If the bolt is opened out after complete tightening, its length gets increased permanently as compared with the initial length. The initial few threads which transfer the load from the nut to the bolt suffer the maximum damage. Therefore, a bolt completely tightened shall not be reused under any circumstances.

The bolt tensioned completely can be identified by damage to the threads especially near the front end of nut where most of the load is transferred. The coating, if any, may also show signs of damage. The free running of the nut on the threads may also be affected. A fully tensioned bolt, opened out for any reason whatsoever, needs to be rejected and removed from the site of work. Along with the bolt, the nut, washer(s) and DTI(s) used on that bolt also need to be rejected and removed from the site of work. A bolt which has been snug tightened or partially tightened and then opened out will not be considered to have been re-tensioned and reuse of such bolts will be permissible in the same or different holes, as required.

Except for works of minor nature where number of HSFG bolts to be installed is very less, only mechanical torque wrenches (pneumatic, hydraulic, electronic etc) shall be used for tightening of bolts. For small quantum of work, manual torque wrenches may be used. Calibrated torque wrenches, accompanied with a certificate to the effect, shall be brought to site. Torque wrenches shall be calibrated periodically, once in a year, to an accuracy of ± 10%. These shall be re-calibrated in case of any incidence involving the wrench during use resulting in heavy impact (such as fall, mishandling etc). The procedure for calibration of torque wrench shall be as specified by the manufacturer.

There are other methods of tensioning, but only the two methods outlined above have been found to be suitable as per the field conditions.

APPENDIX-K

PAINTING SYSTEM, ASSESSMENT AND MEASUREMENT

A - Method of Preparation of Reference Surface for Comparison

1. **Base Metal:** A flat piece of medium or low carbon steel not less than 6 mm thick, having a Vickers Hardness of 180 to 220 HV 10, when tested in accordance with IS: 1501 (Part-1).

2. **Abrasive:** Chilled iron grit of sizes G-C 100 to G-C 42 in accordance with IS: 4683 is suitable.

3. **Girt Blasting Equipment:** Any suitable direct-pressure equipment, such that the air pressure is 3 kg/cm^2 to 4 kg/ cm^2 at the pressure grit container, the blast hose being not more than 4.5 times long and of diameter not less than three times the nozzle diameter, is suitable.

4. **Procedure:** Grit blast with the blasting nozzle approximately at the right angles to and 250 mm from the surface, until a uniformly rough, clean surface not less than 2500 mm^2 in area, has been obtained and maintained without visible change for at least 25% of the total blasting time and preserved in that condition.

a) **Cleaning by Petroleum Hydrocarbon** Remove oil / grease from the metal surface by using petroleum hydrocarbon generally used in solvent extraction as per approved grade in accordance with IS: 1745.

b) **Cleaning by Blasting** The cleaning or roughening of a surface by the use of natural grid or artificial grit a fine metal shot which is projected on to a surface by compressed air or by mechanical means.

The blast media type, shape, size, density, and hardness, along with media acceleration and volume of media, combined with blasting distance from the work piece, angle of impact and time cycles are important factors in the blast process capabilities.

The blasting equipment is produced to deliver, reclaim and contain the media, contain the part to be blasted and collect the dust from the blasting process. Parts can be processed individually as a batch process or can be automated through the system.

Table K.1 Surface Effects from the Blasting Process

Sl. No.	Visual	Mechanical
1	Bright Matte Finish	De-Burring
2	Dull Matte Finish	De-Flushing
3	Satin Finish	Paint and Coating Removal
4	Satin Luster Finish	Peening
5	Blending of Tool Marks	Pre-Paint and Coating Adhesion
6	Removal of Weld Discoloration	Heat Treat and Mill Scale Removal
7	Surface Cleaning	Weld Spatters Removal
8	Glass Frosting and Etching	Thermal Metal Spray Preparation
9	Pre-Plate and Anodize Finishes	Rust Removal and Mold Cleaning

Factors that Affect Blast Finishing is as follows:

i) Media delivery system.
ii) Blast contaminant enclosures, media recovery and dust collection systems.
iii) Media used in industrial systems.

Media (Sand/Grit) Delivery Systems: There are three media delivery systems that propel and deliver media for high speed impact to the part being processed.

i) Air Blasting (Pneumatic)
ii) Mechanical Wheel (Airless Blasting)
iii) Hydro Blasting (Pumped Water)

Air Blasting: Air Blasting utilizes air compressors energy to deliver air / media (sand / grit) at speeds and volumes to impact the parts being processed.

The air speed or pressure of an air compressor is controlled by a pressure regulator. The regulator can increase or decrease the speed of the media delivery. Air pressure is measured by Pounds per Square Inch (PSI) or Kilograms per Square Centimeter (KSC), the industrial blasting is effectively done between 20 to 90 PSI or 1.5 to 6.0 KSC. The higher the PSI / KSC is the higher the air speed.

The volume delivered of the air / media mix is determined by the orifice or opening diameter of the nozzle with pressure blast systems or air jet diameter of the suction blast gun body. Air volumes are measured by Surface Cubic Feet per Minute (SCFM) or Surface Cubic Meter per Minute (SCMM). The larger of the orifice ID opening is the larger volume of air / media. Other factors that affect volume of air into the blast system are media and air hose diameter. Increased air pressure (PSI / KSC) also increased the SCFM / SCMM with a given size of orifice.

Industrial blasting gun bodies of suction cabinet blast systems range between 12 to 38 SCFM or 0.35 to 1.0 SCMM. The pressure blast cabinet systems range between 12 to 68 SCFM and 0.35 to 2.0 SCMM and the pressure blast room systems use up to 254 SCFM or 7.0 SCMM. Industrial air compressors produce approximately 4.5 SCFM or 0.125 SCMM per Horse Power (HP). Blasting cabinets require 3 to 15 HP compressors per nozzle and blast rooms can use up to 53 HP per man or nozzle.

Grades for Surface Cleaning

There are four different grades, in accordance with IS: 9954 of rust (A, B, C and D) developed on the surface of steel, and recommends preparation of this rust grades to either two grades of surface preparation (St-2 and St-3) when scraping and wire brushing is employed or four grades of surface preparation (Sa-1, Sa-2, Sa-2.5 and Sa-3) when blast cleaning is employed.

Grade - A: Steel surface covered completely with adherent mill scale and on which little rust is visible to naked eye.
Grade - B: Steel surface which has begun to rust and from which the mill scale has begun to flake.
Grade - C: Steel surface from which the mill scale has rusted away or from which can be easily scraped, but on which little pitting is visible to the naked eye.
Grade - D: Steel surface from which the mill scale has rusted away and on which considerable pitting is visible to the naked eye.
The Rust Grades steel with its Blast Classes is shown below in figure:

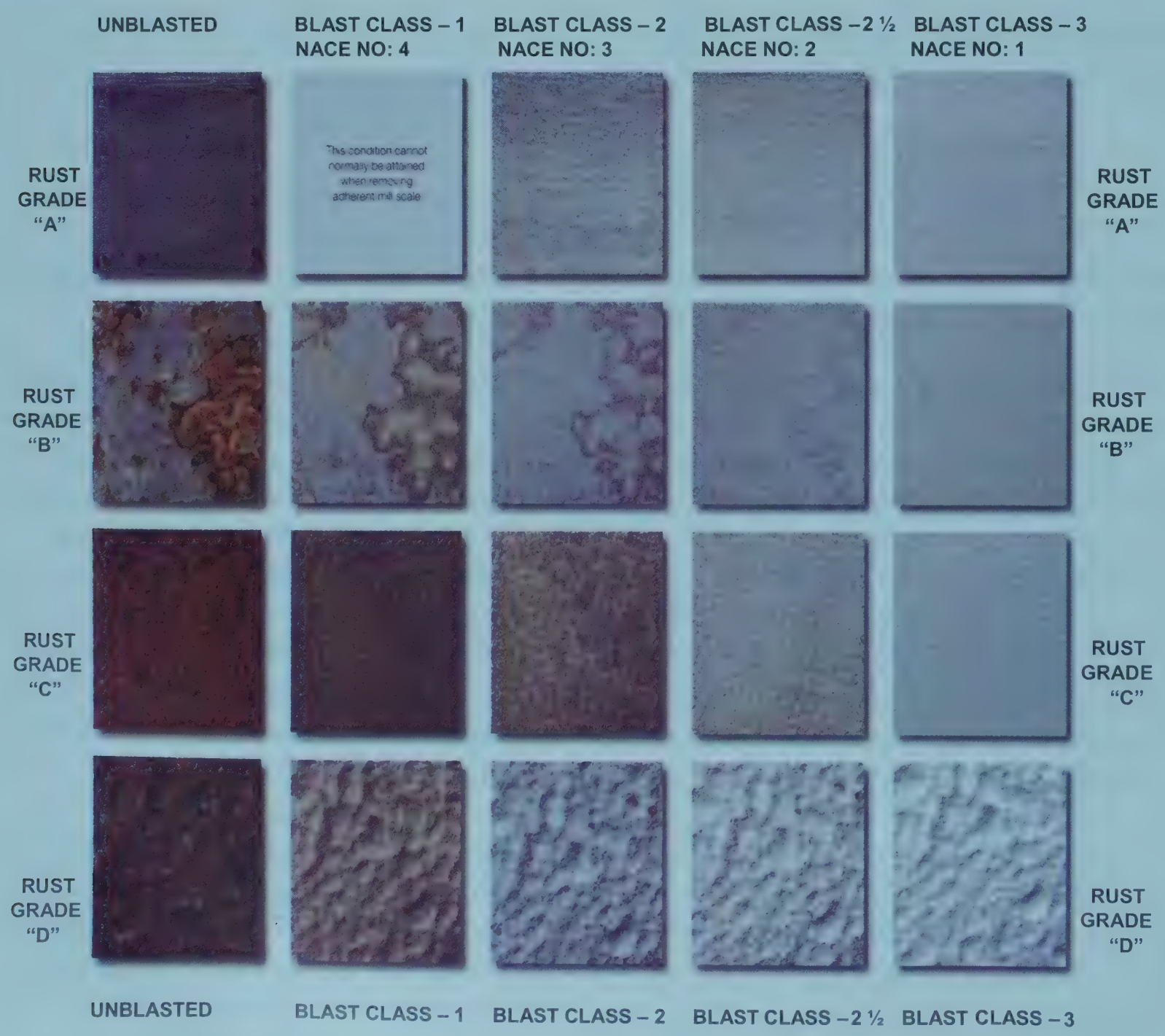

Workshop and Site Work

i) In most cases the use of a cleaning agent followed by rinsing is considered to be more effective than the use of a solvent. If traces of oil or grease remain after the first attempt, further cleaning may be necessary. However, if wetting of the surface is not permissible, use of a solvent may be necessary.

ii) It should be ensured that, throughout the duration of the work, clean water is used for wet cleaning and rinsing. Generally, potable water will be satisfactory, but there should be a check that the water (or the cleaning agent) does not leave harmful residues on the surface. Warm water may be used where appropriate.

iii) There should also be a check that the cleaning agents offered do clean satisfactorily and do not themselves leave harmful residues on the surface after final rinsing. Abrasives should be checked for freedom from impurities, which could contaminate the surface to be cleaned.

iv) Dry blast cleaning in particular may have to be repeated if the steel to be used for the works has become rusted and contaminated before fabrication as a result of being stored in the open in an industrial environment. In some cases the site coats may not be applied for a considerable time and repeated cleaning down may be required.

v) Blast cleaning will not remove all weld spatter; it should therefore be ensured that firmly adhering spatter is removed before blast cleaning. In most cases weld spatter can be removed before the application of a protective system. It will not, however, be possible inside some hollow sections, e.g. tubes, even if these are to be hot dip galvanized internally.

vi) Except at site welded joints, dry methods of surface preparation should be specified for the inside of box girders otherwise excessive water will accumulate on the bottom surfaces especially between stiffeners, also surfaces may remain wet for some time and delay painting. The internal surfaces of hollow sections which are to be coated should be free from dust and debris as far as practicable.

vii) Although the initial surface preparation may have been satisfactory, and all dust and debris removed, further dust may well collect on the cleaned surface. In harsh environments further pollutants may also be deposited. It is essential therefore to check surfaces immediately before painting.

viii) If particles of abrasive are allowed to fall onto a freshly painted surface they are likely to become embedded in the wet paint. Workshop coats in particular may also become contaminated by metallic dust from badly contained thermally sprayed aluminium metal coating operations. Embedded abrasive in fresh paint should be removed, and if necessary, the affected coat restored. Wet paint which has been contaminated by thermally sprayed aluminium metal coating dust should be removed completely. If dried films only have been

affected, wet cleaning may prove effective in removing such surface dust, however, careful checks should be made. Thermally sprayed aluminium metal coating dust remaining on a micaceous iron oxide pigmented coat, for example, would be difficult to remove later and could cause early failure of site coats.

Cleaning of the workshop coats before painting on site will usually be necessary as it is not possible to check that all areas are free from contamination. Surface Preparation – Materials and Methods

Dry Blast Cleaning in the Workshop

i) There should be a check that the grading and hardness of the abrasive used for the work complies with it is important to realize that the restrictions on abrasive sizes necessary to keep the blast cleaning profile within the ranges covered by the Surface Profile Comparator will also reduce the number of 'rogue peaks'.

ii) Samples should be taken from abrasive stored in the blast cleaning plant before the start and during the work to ensure that there are no oversize particles in the mix. All fresh supplies should also be checked before they are used to replenish abrasive in use. The inspector should have the necessary sieves in his possession in the workshop. Abrasive which does not comply with the Specification should be rejected. Oversize particles in excess of that allowed by the relevant standard, for example, are unacceptable. The performance of equipment and the technique of the operator can affect the attainment of a satisfactory profile or cleaning rate. A working mix with oversize particles will increase the frequency and size of 'rogue peaks' and affect the cover provided by the subsequent painting.

iii) Contamination of abrasives is not generally a problem in the workshop when new steel is being blast cleaned. However, the whole mix may well have become contaminated if steel, which has been exposed to, say, oil, grease, sulphates or chlorides, has been put through the plant. Hence the importance of early and subsequent checks.

iv) Power wire brushing, whether or not preceded by chipping or scraping, is unlikely to achieve a satisfactory standard of cleanliness and is therefore considered as no more than an aid prior to abrading.

v) Abrading will be used mainly to repair mechanical damage and during restoration of local failure in the shop paint system. Water should not be allowed to come into contact with exposed thermally sprayed aluminium metal which is porous, nor if possible with bright steel. However, wet abrading can be usefully employed where hot dip galvanizing is present.

vi) Only power tools which rotate at the relatively fast speeds necessary for power wire brushing or abrading should be used. Deposits of concrete are difficult to remove if allowed to harden, hence it is important that appropriate chipping and scraping tools are used otherwise the paint system is likely to be damaged. The use of hard grinding wheels is not permitted for abrading as their edges can easily cut into the surface.

vii) Electric drill speeds are relatively slow, the use of hand-held drills as a power source for wire brushing often results in a polished appearance due to the formation of a patina of pollutants and corrosion products.

viii) Caters for the protection of exposed areas of cleaned steel substrate or thermally sprayed aluminium metal coatings before they can be adversely affected by wetting or debris from adjacent surface preparation.

ix) **Wet Cleaning in the Workshop:** Workshop coats which may have been exposed on site for a considerable time, particularly in a Marine environment, should be thoroughly cleaned. Scrubbing of flat surfaces is usually satisfactory, however, light wet blast cleaning may be necessary to remove harmful contamination from areas difficult to clean. The selected cleaning agent should be used as recommended.

x) **Dry Cleaning in the Workshop or on Site:** Dry cleaning is usually satisfactory for internal surfaces as these are less likely to have become contaminated. Nevertheless these surfaces should be checked before painting and further cleaning carried out if necessary. If this is unsatisfactory, advice should be sought from the Overseeing Organization.

xi) **Dry Blast Cleaning on Site using Dry Air / Abrasive System:** Copper slag can be used to blast clean steel surfaces which are to be painted only, also to remove unsound paint; however, if surfaces have become heavily contaminated, dry blast cleaning may not be adequate and wet blast cleaning may be necessary. Modern and efficient blast cleaning equipment, which will re-circulate metallic abrasive, is available. The requirements for fasteners are covered. It should be noted that, under the Control of Substances Hazardous to Health Regulations 2002, sand (or other substance) containing free silica may not be used as an abrasive for blast cleaning.

xii) **Wet Blast Cleaning using Low Pressure Air / Water / Abrasive System on Site:** The main advantages of wet blast cleaning on site are that it keeps dust down and that it is the best method of removing heavy contamination. It should not be used to clean up thermally sprayed aluminium metal coatings because they are porous. Wet blast cleaning as a first time method will not produce a satisfactory profile for the application of thermally sprayed aluminium metal coating. It should only be used on bolted connections if dry blast cleaning is impractical, otherwise water will penetrate into the joint. It is, however, satisfactory for welded joints which are to be painted, also for cleaning up or removing paint over a steel substrate. It can also be used to clean up the surface only of a paint system applied over thermally sprayed aluminium metal coating, but no further, as wetting of thermally sprayed aluminium metal coating should be avoided. Unless blast cleaned and adjacent surfaces are cleared of abrasive and debris within a short period, recontamination is likely

xiii) **Wet Blast Cleaning using High Pressure Water / Abrasive System or Ultra High Pressure Water System on Site:** The efficiency of the equipment selected by the contractor should be checked during the procedure trials. Wet blast cleaning will not produce a surface profile and

should not be used as the only method of surface preparation of steel. No flash rusting should occur after ultra high pressure water system cleaning.

xiv) **Combined Wet / Dry Blast Cleaning on Site:** When wet blast cleaning is used to prepare steel surfaces, flash rusting may occur if painting is delayed. The required standard of cleanliness should be restored by light dry blast cleaning and paint should be applied while the surfaces are still clean. As already mentioned, one of the main advantages of wet blast cleaning is its effectiveness in removing contamination; however, if this is not achieved using wet blast cleaning, any subsequent light dry blast cleaning, although it may restore a clean appearance, is unlikely to remove contamination remaining on the surface or in the blast cleaned profile. For very heavy contamination ultra high pressure water / abrasive system cleaning should be considered, as in this method heat is generated by the impact energy of the water on the steel, which will assist in contamination removal.

xv) **Grinding After Surface Preparation in the Workshop or on Site:** Visible surface defects should have been rectified by grinding during fabrication and before blast cleaning in the workshop. Blast cleaning may reveal further defects and these should be dealt with before workshop painting. Heavy mechanical damage or scoring caused during transport or during erection should also be rectified by grinding. Grinding has to be carried out with minimum damage to the surface and only skilled operators should be allowed to carry out this work.

Workmanship Standards for the Surface Preparation of Steel by Blast Cleaning, Abrading, Grinding and Cleaning:

i) If the type of abrasive is not specified, the contractor may use any of the abrasives described in the workshop. Steel shot is satisfactory for blast cleaning surfaces to be painted only.

ii) Surface Profile Comparators comprising stainless steel plate showing agreed ranges for fine, medium and coarse blast cleaning profiles should be used.

iii) The amplitude of the blast cleaning profile on new steel is largely controllable by the size of abrasive used. Although the size and incidence of 'rogue peaks' are also related to the size of abrasive, faulty manual blast cleaning techniques can greatly increase the problem. Regular use should be made of the Comparator and frequent checks of the abrasive should be carried out to ensure compliance.

iv) 'Hackles' ranging from small spikes, some just visible to the unaided eye to those which have to be pulled from the surface and leave fissures which require treatment by grinding, show up as a result of blast cleaning, even when fine grades of abrasive are used. It is difficult to distinguish between 'rogue peaks' and small hackles, and because the latter can appear at any time during blast cleaning, even if the process is well controlled, continuous checking is necessary.

v) If thermally sprayed aluminium metal coating, in particular, is to be applied, then the remainder of the component as well as the dressed areas may have to be blast cleaned in order to comply with. Even if paint only is to be applied, re-blast cleaning may be required if the dressed areas are large, viz. such that the surface preparation by blast cleaning overall can no longer be claimed to exist.

vi) Generally, dry blast cleaning to Sa 3 or Sa 2½ quality, of lightly rusted surfaces which may be contaminated to a minor extent, will reduce contamination to negligible quantities. However, as the levels of rust and contamination on stock steel increase, so will the quantity of soluble salts remaining after blast cleaning increase; these will be unevenly distributed, making inspection difficult. The abrasive in use is also likely to become contaminated and may spread salts over otherwise clean surfaces.

vii) Surfaces should therefore be checked for contamination before and after blast cleaning particularly in the case of more heavily rusted stock steel. If blast cleaned steel is still contaminated to an unacceptable level it should be rejected immediately; the abrasive should also be checked. The contractor may decide to pre-clean steel so that it can be finally dry blast cleaned satisfactorily; some blast cleaning plants include a washing stage for this purpose.

viii) The requirements for Sa 3 & Sa 2½ to be achieved by blast cleaning are described those for freedom from 'harmful residues' or 'detrimental contamination' are described.

ix) It will be seen that Sa 3 or Sa 2½ quality can only be achieved by blast cleaning the surface. 'Bright steel' can be chemically clean if the steel surface was chemically clean originally. However, there may be cases where an 'overall bright appearance' will be obtained in a contaminated area, in which case any remaining detrimental contamination will have to be removed.

x) Blast cleaning to Sa 3 quality with chilled iron grit or aluminium oxide grit is necessary for the successful overall adhesion of thermally sprayed aluminium metal coatings. Sa 3 quality should also be specified for exposed steelwork when minimum maintenance is required, that is without any rusting through from the substrate having occurred.

xi) Some small particles may remain embedded in the profile. Faulty blast cleaning techniques, e.g. too high an air pressure, and large sharp particles, will exacerbate the problem. Sharp particles projecting above the blast cleaning profile will be harmful, as will large quantities of abrasive particles lodged in the profile. This has to be observed and precautions taken

xii) For protective systems for difficult access structures the limits for harmful residues and detrimental contamination will be 'virtually nil'. Where 'bare steel' has been specified, checking surfaces for detrimental contamination is most unlikely to be necessary. The same principle also applies to protective coatings.

Procedures for Treatment at Joints

General

i) The treatment specified at joints prior to assembly or welding, covers both workshop and site conditions. Most erection joints are prepared in the workshop for completion later on site. In these cases particular attention has to be given to limiting the application of the primers and to stepping back the undercoats on the parent material. Treatment at completed joints includes sealing against the ingress of water, this should be carried out concurrently with the painting of either workshop or site joints. The requirements are also adequate in the case of joints which have to be prepared and made entirely on site e.g. in permanent strengthening of steelwork.

ii) Generally, contact surfaces at slip resistant connections are blast cleaned only or blast cleaned and aluminium metal sprayed. The standard of preparation and treatment of contact surfaces in slip resistant connections should be as described in any metal coatings to be applied to fasteners in painted only joints, thermally sprayed metal coated joints or thermally sprayed metal coated and painted joints or where uncoated fasteners are to be provided, should be specified.

Fasteners, Joint Material and Parent Material in Joints, before Assembly or Welding in the Workshop or on Site:

i) Uncoated high strength fasteners for preloading are usually delivered with oiled threads or with all the surfaces lightly oiled. Blast cleaning should remove traces of light oil remaining after assembly of the joint. Heavier oil or grease should be removed before assembly.

ii) Steel surfaces which are to be painted on site need only be restored to Sa 2½ quality. Surfaces of thermally sprayed aluminium metal coating should be restored by blast cleaning to sound metal.

iii) For slip resistant connections the standard of preparation and treatment of the friction surfaces of joint material and parent material should be cleaned. Unless described it is important that paints other than a primer or sealer should not be taken into the contact surface area.

iv) When paint is applied to the outer faces of joint material at preloaded connections, a check should be made that joint plates are not reversed during assembly; also if the maximum dry film thickness of 50 microns of paint is exceeded the whole coat should be taken off before the joint is made, otherwise the load carrying capacity of the joint may not be achieved. This also applies to sealer.

v) There are instances where high strength fasteners may be used in shear and bearing rather than the more usual mild steel fasteners. As friction is not a criterion, paint may be taken over the joint surfaces. It is usually impracticable to apply the full workshop system to the contact surfaces, but at least the primer and first undercoat should be applied.

vi) It is only necessary that surfaces to be welded should have a bright clean appearance. A check should be made, however, to ensure that they are free of metal coating, and other protective coatings, otherwise the weld could be impaired.

Parent Material, Workshop Treatment Adjacent to Joints which are to be Assembled or Welded Later at Site:

i) Paint coats should be stepped back at breaks in the system, viz. at joints, otherwise the break will show on completion and a potential weakness in the protective coating may result. It will usually be practical to take the full workshop system over the joint surfaces.

ii) **At Weld Joints:** Thermally sprayed aluminium's metal coating and paint should be kept back from weld areas not only to avoid degradation of the weld, but also to prevent damage to the coating by heat and the possible production of toxic fumes. Hot dip galvanizing should be removed from the prepared joint area otherwise fumes and spatter may be excessive.

iii) **At Completed Joints:** It should be checked that bad weather conditions or a severe environment have not affected unprotected bolted joints adversely; if adverse conditions are likely the contractor should seal any gaps and apply sufficient protection within 48 hours, or earlier if possible, of a joint being made. The protective system on adjacent parent material will usually be satisfactory for all types of joints. However, because of varying requirements for the protection of welded site joints, e.g. internal welds and joints in thermally sprayed aluminium metal contained.

iv) **At Bolted Joints:** Dry blast cleaning is preferable at newly-made joints as wet cleaning and wet blast cleaning in particular will lead to coating system defects if water penetrates into the joints. If the registered priming coat on the outer surfaces is sound, dry cleaning may be adequate provided that the surfaces are checked finally for freedom from detrimental contamination.

v) Site welds may be difficult to free from detrimental contamination by dry blast cleaning to Sa2½ quality. In such cases after an external weld has been freed of slag and wire brushed, wet cleaning may be specified before dry blast cleaning.

vi) Alternatively combined wet / dry blast cleaning can be used, as this method is effective in removing contamination. When any form of blast cleaning is impracticable for external welds in painted only steelwork, wet cleaning should be followed by water based zinc or ferrous conversion coating and a coat of Item 110.

vii) **Sealing at Joints, Plies and Fasteners:** If joints or steel plies have been exposed to water it should be ensured that they are free from moisture before gaps are sealed and the paint system applied.

viii) There should be a check that paint penetrates the fine gaps sufficiently to provide an effective seal and that other gaps are painted in sufficient depth to maintain the seal in position.

B- Paint Coatings

Paints are usually applied by coats of the surface of substrate and each coat has a specific function / purpose.

A coating is a covering that is applied to the surface of an object / substrate. The purpose of applying the coating may be decorative, functional, or both. The coating itself may be an all-over coating, completely covering the substrate, or it may only cover parts of the substrate.

Coatings can reduce friction or serve as adhesive. They can resist temperature extremes, prevent corrosion, and guard against microbial contamination.

Coat: The paint applied to a surface in a single application to form a properly distributed film when dry. A paint system usually consists of a number a coat separately applied in a pre-determined order at suitable intervals to allow for drying in accordance with IS: 1303.

Full Coat: As thick a coat of paint, can be applied in one operation (brush or spray) consistent with the production of a film of uniform appearance, satisfactory, etc., when dry as per IS: 1303.

Types of Paint

The type of paints includes paints based on drying oils, alkyd resin, modified alkyd resin, phenolic varnish epoxy etc. as per **MORTH-1900.**

i) **Ordinary Paint:** Alkyd resin paints for the protective of steel structures are based partly on natural oils and partly on synthetic resins. These paints shall be used for steel structures in atmospheres which are not too aggressive.

Oil based paints can be used for steel structures in cases where the surface preparation cannot be ideal. Ordinary painting can generally be sub-divided into two group:

a) **Primary Coat:** This shall be applied immediately after surface preparation and should have the properties of adhesion, corrosion inhibition and imperviousness to water and air.
b) **Finishing Coat:** These are applied over the primary coat and should have the properties of durability, abrasion resistance, aesthetic appearance and smooth finish.

ii) **Chemical Resistance Paints:** These are more highly corrosion resistance paint and can be divided into two main groups: a) One pack paints (ready for use), b) Two pack paints (mixed before use).

The two pack paints shall be mixed together immediately before use since they are workable thereafter only for a restricted period of time and dry up as a result of reaction between their components and yield hard tough films with resistance to abrasion.

iii) **Vinyl Paints:** These are based on Polyvinyl resins such as Polyvinyl-Chloride (PVC) and Polyvinyl acetate etc. Certain types of vinyl resin paints yield thick, relatively soft and rubber like coatings with good chemical resistance. They can be repainted without difficulty.

iv) **Bituminous Paints:** As paint vehicle, bituminous is inferior, but because of the low price, these should be applied in greater thickness (up to several millimeters) and may be suitable for situations. A significant advantage of bitumen paints is their impermeability to ingress of water. However, bituminous paint does not withstand effectively detrimental effects of oil.

v) **Chlorinated Rubber Paints:** These paints also have good chemical resistance. The main fields of applications shall be aggressive environments. In general, chlorinated rubber paints do not have a high gloss.

vi) **Epoxy Paints:** These resin paints have good adherence to a well prepared substrata. They are mechanically strong and resistant to chemicals. A disadvantage of epoxy resin paints is that it can rapidly become dull when exposed to sunlight. These disadvantages do not, however, greatly influence their protective power.

vii) **Zinc Rich Paints:** The metallic can be used instead of introducing an inhibitive pigment into the paint and such paints can provide cathodic protection to steel.

viii) **Polyurethane Paints:** The chemical and mechanical behavior of polyurethane paint resembles those of epoxy paint very much. However, polyurethane paint retains its gloss for a longer period. Because of the high price of polyurethane paint, a combination of the two viz., polyurethane and epoxy paints may sometimes be used.

General Environment (Exposure Condition): The general environment for which a steel structure is exposed during its working life is classified into five levels of severity stated under table D-1 in accordance to **Annex-D** of IRC:24 "Standard Specifications and Code of Practice for Road Bridges Section-V, Steel Road Bridges (Limit State Method)".

Table K.2 Environmental Exposure Conditions

Sl. No.	Environmental Classifications	Exposer Conditions
1	Mild	Surface normally protected against exposure to weather or aggressive condition as in interior of buildings, except when located in coastal areas
2	Moderate	Structural steel surfaces: i) Exposed to condensation and rain ii) Continuously under water iii) Exposed to non-aggressive soil / ground water iv) Sheltered from saturated salt air in coastal areas
3	Severe	Structural steel surfaces: i) Exposed to severe frequent rain ii) Exposed to alternate wetting and drying iii) Severe condensation iv) Completely immersed in sea water v) Exposed to saturateds salt air in coastal areas
4	Very Severe	Structural steel surfaces exposed to; i) Sea water spray ii) Corrosive fumes iii) Aggressive sub-soil or ground water
5	Extreme	Structural steel surfaces exposed to; Tidal zones and splash zones in the sea Aggressive liquid or solid chemicals

Corrosion Protection Methods: The methods of corrosion protection are governed by actual environmental conditions as specified in IS: 9077 and IS: 9172. The main corrosion protection methods are given below:

i) Controlling the electrode potential,
ii) Inhibitors, and
iii) Inorganic / metal coatings or organic / paint system.

Surface Protection: A coat of primer after removal of any loose mill scale may be adequate in the case of mild exposure. If the exposure condition becomes more critical, more elaborate surface preparations and coatings becomes necessary. Guidelines to protection of steel work for different desired lives are given below in **Table-K.3, K.4 and K.5** as per **Annex-D** of IRC 24.

Table K.3 Protection Guidelines for Steel Work Application Desired Life of Coating System in Different Environments

Sl. No.	Atmospheric Conditions / Environmental Classifications	Coating System					
		A	B	C	D	E	F
1	Nominal Inland (Rural and Urban Areas), Mild	12 years	18 years	20 years	About 20 years	About 20 years	Above 20 years
2	Polluted Inland (high airborne sulphur dioxide), moderate	10 years	15 years	12 years	About 18 years	15-20 years	Above 20 years
3	Normal Coastal (as normal inland plus high airborne salt levels), severe	10 years	12 years	20 years	About 20 years	About 20 years	Above 20 years
4	Polluted Coastal (as polluted inland plus high airborne salt levels), very severe or extreme	8 years	10 years	10 years	About 15 years	15-20 years	Above 20 years

Table K.4 Protection Guidelines for Steel Work Application Specification for Different Coating System (Shop Applied Treatment)

Sl. No.	Protection	Coating System					
		A	B	C	D	E	F
1	Surface preparation	Blast clean	Blast clean	Blast clean	Blast clean	Grit blast	Blast clean
2	Pre-fabrication primer	Zinc Phosphate epoxy, 20 µm	2 pack Zinc rich epoxy, 20 µm	-	2 pack Zinc rich epoxy, 20 µm	-	Ethyle Zinc Silicate, 20 µm
3	Post-fabrication primer	High-build Zinc Phosphate modified Alkyd, 60 µm	2 pack Zinc rich epoxy, 20 µm	Hot Dip Galvanized 85 µm	2 pack Zinc rich epoxy, 25 µm	Sprayed Zinc or sprayed Aluminium	Ethyl Zinc Silicate, 60 µm
4	Intermediate coat	-	High-build Zinc Phosphate, 25 µm	-	2 pack Micaceous Iron Oxide, 85 µm	Sealer	Chlorinated rubber alkyd, 35 µm
5	Top coat	-	-	-	2 pack Micaceous Iron Oxide, 85 µm	Sealer	-

Table K.5 Protection Guidelines for Steel Work Application Specification for Different Coating System (Site Applied Treatment)

Sl. No.	Protection	Coating System					
		A	B	C	D	E	F
1	Surface preparation	As necessary	As necessary	No site treatment	As necessary	No site treatment	As necessary
2	Primer	Touch in	Touch in	-	-	-	Touch in
3	Intermediate Coat	-	Modified Alkyd Micaceous Iron Oxide, 50 µm	-	Touch In	-	High-Build Micaceous Iron Oxide / Chlorinated Rubber Micaceous, 75 µm
4	Top Coat	High-Build Alkyd Finish, 60 µm,	Modified Alkyd Micaceous Iron Oxide, 50 µm,	-	High-Build Chlorinated Rubber	-	High-Build Iron Oxide Chlorinated Rubber, 75 µm,

Recommended Nominal Coating Thickness for Grade – A, and Grade – B schemes for various requirements are shown below in **Table K.6**.

Table K.6

Sl. No.	Environment	Nominal Coating Thickness (in Micrometer) For Varying Services			
		Very Long (More than 20 years Sealers µm)	Long (10 to 20 Years)		
			With Sealers µm	With Paint	
				Metal Coating	Paint Coating
1	2	3	4	5	6
i)	Exterior exposed inland or non-polluted	150 Zn 100 Al	100 Zn -	100 Zn or Al	30 to 100
ii)	Exterior exposed inland or non-polluted industrial	150 Zn 150 Al	100 Zn 100 Al	100 Zn or Al	60 to 100
iii)	Exterior exposed Marine or Coastal non-polluted	150 Zn 150 Al	100 Zn 100 Al	100 Zn or Al	30 to 100
iv)	Exterior exposed Marine or Coastal polluted	250 Zn 150 Al	150 Zn 100 Al	100 Zn or Al	30 to 100
v)	Interior and / or sheltered Normally dry	- -	- -	100 Zn or Al	30 to 100
vi)	Interior and / or sheltered but frequently wet	100 Zn 100 Al	- -	100 Zn or Al	30 to 100
vii)	Sea water immersed	250 Zn 150 Al	150 Zn -	100 Zn or Al	60 to 100
viii)	Sea water splash	250 Zn 150 Al	175 Zn -	100 Zn or Al	60 to 100
ix)	Non-saline or potable water	150 Zn 150 Al	150 Zn 100 Al	100 Zn or Al	30 to 100

Testing of Paints

Provision of Samples

i) Quality assurance of paint as delivered, that is verification of the composition data and application characteristics given in paint manufacturers' registered formulations can only be carried out on paint samples taken from previously unopened tins; these are known as 'A' samples. Before the contractor dispatches the 'A' samples to the address given for testing in accordance with the checks referred to should be carried out but on paint taken from other tins of the same batch. 'B' samples, on the other hand, should be taken from paint in use to ensure that it is as supplied.

ii) **A' Samples:** Although 'A' samples are not required in the case of certain highway structures described in samples should still be taken as these make an effective contribution to quality control.

iii) Special deliveries of single tins of paint arranged by the contractor, to the site or to the testing authority, are not acceptable as 'A' samples. Samples should be selected from fully representative batches at the workshop or on site. As a minimum, the condition of the paint in the tins should be examined and, after mixing, the specific gravity should be checked.

iv) Paint found to be faulty, especially in the case of appreciably incorrect specific gravity should be rejected at the workshop or on site. It should be ensured that the cause of any unsatisfactory application during the procedure trial is remedied before the start of the main painting.

v) After submission of the first 'A' samples of each type of paint, further 'A' samples should be submitted for testing as painting proceeds depending on the volume of paint used in the works.

vi) Details of each set of samples dispatched should be listed in a suitable format.

vii) Painting may be permitted to be started before the results of testing 'A' samples have been received only if postponing the painting would mean an unacceptable delay in the work; however, such permission should not relieve the contractor of his obligations under the contract. When a first 'A' sample is rejected, an 'A' sample of the replacement batch of paint should be submitted for testing as soon as possible. If painting is allowed to proceed with a replacement batch or a subsequent batch still under test, such permission should not relieve the contractor of his obligations under the contract.

viii) **'B' Samples:** Control or 'B' samples are to be taken as spot checks in order to ensure that paint actually being applied will be tested. 'B' samples should be submitted.

ix) **Provision of 500 ml Tins, Packing and Transport:** It should be ensured that there are an adequate number of tins, lids and lid clips at the start of the work to enable samples to be taken.

x) Unless tin lids are clipped down securely, and the tins properly packed, the contents may be spilled. Even if only one tin leaks, the spilled contents may obliterate markings on other tins, testing thus being delayed until new samples are checked and delivered.

xi) The selected 'A' or 'B' samples should be labelled correctly. Not only should the contractor dispatch samples promptly, but his transport arrangements should be such that the samples reach the testing laboratory without delay, particularly in the case of the first 'A' or 'B' samples. The contractor should also arrange for collection of all samples from the testing authority following satisfactory testing and reporting.

Storage Requirements and Keeping Periods for Paint

i) It should be ensured that a suitable store has been provided and that paint is unloaded directly into it. The store temperature should be controlled within the limits specified. Extremes of temperature, freezing conditions in particular, can affect the properties of the paint. The paint store should be as near as practicable to the painting areas. If the paint store is at a considerable distance from the work area, paint is unlikely to be returned to the store at the end of the working day, or several tins may well be kept out on site to be ready for use and thus may be damaged by extremes of temperature; also if the inspector has to waste time in journeying to and from the paint store to check deliveries and select samples, his supervision of the work will be less effective.

ii) The date of manufacture in particular should be marked on the tins. If the date of manufacture is not indicated the paint should always be rejected.

iii) The requirement that paint in use should be returned to store and kept in sealed containers is necessary for both brushing and airless spray grades. Paints with fast evaporating solvents will be adversely affected if the containers are left open in hot weather.

iv) Only the types of paint referred should be considered for extended keeping times. The performance of other paints can be permanently affected if their keeping times are exceeded. The paint manufacturer's checks will include the following:

Property	Likely fault
Condition in tin	Settlement, skinning, separation
Viscosity	Tendency to body
Drying time	Absorption of dryers
Fineness of grind	Pigment agglomeration, resin 'seeding'
Color	Flocculation, agglomeration of color pigments

Lastly, the paint manufacturer will verify that the specific gravity of paint about to be returned after any necessary reconstitution is correct.

v) Paints which have exceeded the keeping period before delivery, or during storage before or after testing under, should not be used.

Application of Paint

i) In exceptional circumstances, additional solvent may be required when painting is carried out at extremes of temperature or to correct a minor deviation from the normal viscosity.

ii) It should not only be checked that surface preparation has been carried out in accordance with the Specification but also that the standard has been maintained up to the time of application.

iii) Paints and other protective coatings as per Manual of Paints for Structural Steelwork are generally applied either by brush or airless spray or by both. However, for paints with lower viscosity, e.g. Aluminium epoxy sealer, good use can be made of air assisted spray equipment to avoid over application, flooding and overspray of paint. The use of rollers has been found to be unsatisfactory and is not permitted.

iv) Records should be kept, as these will be required should any premature coating system failure occur. Difficulties may arise on site in deciding when a surface is dry enough to paint. Most types of paints apart from MC systems, are intolerant of moisture at the time of application and during the curing period. Generally, the rule should be, if moisture is present or may be expected to be present at the time of application or during the curing period, then painting should not go ahead.

v) A check on the amount of paint used after allowing for waste is a useful verification of film thickness.

vi) A record of wet film thickness checks should be kept. This is particularly important in the case of site painting; non-destructive checks of total dft are unlikely to be conclusive although they are useful as a guide. If there is any doubt about the dft of the workshop or complete system it is possible to cut out 10 mm x 10 mm samples and have these checked. The usual practice, however, is to make an angle cut using cutting tool edge angle' into the system and to check the thickness of each coat with a small viewing microscope fitted with a graticule. A proprietary instrument of this type is available. Equipment necessary to carry out these checks should be kept on site.

vii) Defects in applied coating systems are, as often as not, due to inadequate surface preparation rather than application of faulty paints. Compliance with the Specification,

especially the requirement for satisfactory adhesion, should be checked from the time work starts and not left until the steelwork is about to be dispatched from the workshop or until the contractor has dismantled his scaffolding and is about to leave the site. Remedying faults in a difficult access situation, such as over a motorway, is usually time consuming and expensive.

viii) **Stripe Coats:** Paint has a tendency to pull away from corners and even if the specified minimum total dft can be attained by careful application, it is unlikely to be maintained and stripe coating is always necessary. The first stripe coat is applied at the workshop to reinforce the workshop system and the second on site to reinforce the site coats. When the whole system is applied at the works or on site, e.g. at connections, two stripe coats will still be required. It should be ensured that the first stripe coat on fasteners treated with Item 155 is brush applied carefully, any final traces of grease should be removed beforehand using a solvent, and not by wet cleaning down.

ix) **Exposure Times for Prepared Steel Surfaces and for Metal Coatings:** Exposure Times and Treatment and Overcoating Times for Paints. The time is the basic requirement when painting is carried out in average conditions in the workshop or on site. However, longer or shorter exposure times may be permissible depending on conditions. For example, in an environment where the relative humidity is low, clean steel which has been dry blast cleaned in the workshop or on site, can be left for longer than 4 hours provided that there will be no adverse effect.

x) Exposure times on site for sealed thermally sprayed aluminium metal coatings may also be extended in good conditions. Components will be considered as not having been exposed, as described if they are fully protected during the short time which may be required for transport from workshop to workshop. Transport should not be allowed during unfavorable weather, e.g. heavy rain, and should be restricted to a mile or so at the most.

Painting Measurement

Coating Thickness: The coating thickness of the paint is the measurement of the amount of a paint applied to a surface. While the paint change from a liquid to a solid as it cures or dries, then the thickness can vary a great deal between the time of application and the point at which the coating has dried completely. The paint coating thickness will also vary as a result of the surface type to which the paint was applied. The coating thickness of paint may show a large variance if it is applied by sprayer, brush or roller. These same variables can also help determine which available method of measurement is most likely to produce accurate results.

A number of factors affect coating thickness, including improper thinning, environmental conditions or mixing ratios when using two-or-multi-component coatings. These are all minor things that can add up to a major problem.

A coating thickness gauge (paint meter) is used to measure dry film thickness of the paint. Dry film thickness is probably the most critical measurement in the coatings industry because of its impact on the coating process, quality and cost. Dry film thickness of the paint measurements can be used to evaluate a coating's expected life, the product's appearance and performance, and ensure compliance with an International Standards.

The Dry Film Thickness (DFT) of paint can be measured using two methods: Non-Destructive Coating Thickness Measurement and Destructive Coating Thickness Measurement.

The non-destructive methods are done by using techniques which do not damage the paint coating or the substrate where the destructive method is done by cutting coating of the substrate using a cutter.

Electromagnetic Meter: The method of measuring film thickness can be accomplished by using any number of electromagnetic devices though these are more expensive but more accurate. These devices most often use a constant magnetic field to measure the density of a coating on a steel surface. As the device's probe nears the painted surface, the device measures the change in magnetic density until a quantitatively accurate measurement of film thickness is determined. Despite the higher cost, electromagnetic measurement devices are a good choice because they are reliable, as they are largely immune to human error or variance due to different operators.

Any magnetic or electro-magnetic thickness meter that will measure local thickness of a known standard with an accuracy of ± 10%.

Calibration of Instrument: Calibration and check the meter on one of the following standards (as appropriate).

i) Applicable to magnetic and electro-magnetic meters other than the pull-off type. A soft brass shim, free from burrs, in contact with the grit-blasted surface of the base metal prior it's being sprayed. The thickness of the shim shall be measured by micro meter and shall be approximately the same as the thickness of the coating.

ii) A sprayed metal coating of uniform known thickness approximately the same as the thickness of the sprayed coating to be tested, applied to a base of similar composition and thickness to the article being sprayed. grit-blasted in accordance with the surface preparation.

Procedure: For each measurement of local thickness, make an appropriate number of determinations, according to the type of instrument used.

With instrument measuring the average thickness over an area of not less than 0.645 cm^2, the local thickness shall be the result of the one reading.

With the instruments having one or more pointed or rounded probes, the local thickness shall be the mean of three readings within a circle of 0.645 cm^2 area.

With meters having two such probes, each reading shall be advantage of two determinations with the probes reversed position.

Elcometer: Elcometer offers a wide range of coating thickness gauges to measure dry film thickness. This instrument can be used to facilitate testing of paint thickness on steel girder bridge in shop or field working condition. This is easy to monitor the uniformity thickness effectively, and it also can check if the thickness is suitable for the design specification.

The ultrasonic elcometer has two main parts, the host and the transducer. The host circuit consists of transmitter circuit, receiver circuit and display counted circuit. The transducer is work end of the ultrasonic one. It transmits and receive the ultrasonic sound waves that elcometer uses to calculate the thickness of paint coating.

The ultrasonic elcometer is designed according to the principle of ultrasonic sound waves reflection. The high pressures waves are generated by the transmitting circuit excite transducer, and then it transmits ultrasonic sound waves. When the ultrasonic waves reach the metal surface, it will be reflected back to the transducer. After receiving the pulse by the receiver circuit, the microcontroller will treat these digit signals and display the thickness value through the LCD. In calculating the thickness, the delay between echoes of ultrasonic waves the transducer-face is equal to the time needed to pass through the coating twice, so the real thickness is the ultrasonic waves velocity in the coating multiplied by half the time. This result is real distance.

The elcometer shall be able to perform the following:

i) Measure the coating thickness of enamel paints, epoxy paints metallizing Zn. or Al. etc. on steel structures.
ii) Measurement between 0 – 100 µm.
iii) Weight of the instrument is light, approximately 200 gm. ± 20 %.
iv) The measurement is quick and easy; sample can be measured on more points.
v) Facility of statistical display of significant values such as mean value, standard deviation, minimum and maximum values.
vi) Measuring large amount of samples during the production can be greatly improved.
vii) The simple instrument operation.
viii) The accuracy in new condition is ± 5 % and with minimum accuracy of ± 10 % in service.

Wet Film Thickness Gauge: This is an inexpensive and easy to use tool that quickly measures coating thickness. The wet film thickness gauges are designed to quickly and easily measure the thickness of coating immediately after they have applied to a substrate. These gauges are also commonly known as "comb". The gauge incorporates a serious of notches cut into their sides much like the teeth on a comb.

Wet film combs are available in a variety of materials including stainless steel, aluminium, and plastic and with various measurement scales ranging from 20 µm. to 3000 µm.

Place the wet film thickness gauge or comb perpendicular to and touching the coated substrate, and penetrate the surface of the coating with teeth of the comb until the substrate is firmly contacted. Wait several seconds to allow the teeth of the comb to become 'wetted' by the coating. Remove the wet film gauge vertically keeping it at right angles to the substrate. The gauge may now be read to determine the wet film thickness. The Wet Film Thickness (WFT) of the coating lies between the values of the smallest un-coated (dry) tooth and the larger coated (wet) tooth. However, a wet film thickness gage is only useful if the paint or coating has not yet dried or cured. Be sure to clean the gauge with appropriate solvent after use.

Methods of Test for Adhesion: Sprayed metal coating shall be subjected to an adhesion test either by the a) Scribing Method or by the b) Grid Method as per IS: 5905.

a) **Scribe Method of Test for Adhesion:** Test for adhesion is done by using a straight edge and a hardened steel scriber which has been ground to a sharp 30 degree point, scribe two parallel lines at a distance apart equal to approximately ten times the average coating thickness. In scribing the two lines, apply enough pressure on each occasion to cut through the coating to the base metal in the minimum number of stroke.

b) **Grid Test for Adhesion:** Using the tool defined as above scribe method and cut a lattice of the following dimensions as shown below in **Table K.7**.

Table K.7

Thickness of Coating Verified (μm)	Distance between Cut (mm)	Approximate Surface to be Covered by the Latice (mm^2)
Up to 200	3.00	15 x 15
Over 200	5.00	25 x 25

Determination of Thickness by Magnetic Method: The measurement of thickness shall be made by Magnetic Method described in IS: 3203.

Magnetic Method involves instruments which measure either the attractive force between a magnet and the coated specimen or the reluctance of a flux path through coating and the basis metal. Either the attraction force or the reluctance as measured is a function of the thickness of the coating.

Any commercially available instrument may be used for measurement.

Inspection: The minimum local thickness shall be determined by the methods described above.

The sprayed metal coating shall be subjected to an adhesion test using the method above. If any part of the coating between the lines breaks away from the base metal, it shall be deemed to have failed the test.

Specimens, which have rejected shall have the defective sections blasted clean of all sprayed metal prior to re-spraying. Where the rejection has been solely due to too thin a coating, sprayed metal of

the same quality may be added provided that the surface has been kept dry and is free from visible contamination.

Painting Inspection Practice Tables

Table K.8 Inspection for Surface Preparation (Blasting)

Sl. No.	Checking Point at Stage	Inspection Basis	Remarks
1	Surface Preparation Condition	ISO Sa 2.5 or ISO Sa 2 ISO St3 or ISO t2	As per Paint Specification
2	Oil, Grease	Not to find any oil or grease when hand / rag is polished it Not to show up contamination oily with naked eyes	
3	Grit, Foreign Matters	To remove grit and foreign matters	
4	Welding spatters and steel Laminations	To remove irregular angle / angle sharp spatters To remove steel laminations	
5	Re-rusted and Mis-surface Preparation Spots	Not to turn into reddish black an steel surface preparation Not to omit secondary surface preparation welding lines, inside of angle stiffener and the edge of holes which are difficult surface preparation	
6	Zinc Salt Treatment	To remove same white sedimentation on exposed shop primed surface; however, the tracing is allowable after removed Zinc Salt	
7	Welding Fume	Not to find any Fume when hand / rag is polished It To do treatment the spot with sand papering	
8	Stripe coated welding lines with Zinc Primer	To remove Zinc stripe coated welding lines during secondary surface preparation	
9	Marking with Chalk	Not to find any chalk when hand / rag is polished it	
10	Cleaning Condition	To make good condition before painting	
11	Relative Humidity	As per drawing of paint inspection	
12	Balance between dew point and steel temperature	As per drawing of paint inspection	

Table K.9 Subsequent Painting Inspection

Sl. No.	Checking Point at Stage	Inspection Basis	Remarks
1	Drying condition for Paint Film	Not to show push-up painted film when thumb is fiercely twisted on painted film Not to find when feet is trodden on painted film	As per Paint Specification
2	Stripe Coat Condition	To cover under coat and stripe coat constantly without omission	
3	Re-coat interval (Min./Max.)	As per Paint Maker's recommendation	
4	Cleaning Foreign Matters Condition	To remove Foreign Matters and spray dust	
5	Low DFT and Holidays	Low DFT is based on the drawing of Paint specification and is not found holidays	
6	Sagging and Exceeding DFT	Severe sagging is repaired with sand preparing in order to make it smooth surface; however, sagging of various hole, collar plate, scallop, etc are not repaired with paint Maker's recommendation when builder is stripe coated for the edges exceeding DFT than Paint Maker's recommendations repaired with sand papering	
7	Checking for Relative Humidity	Below 85%	
8	Balance between Steel Temperature and Dew Point	As per drawing of paint inspection	

Table K.10 Dry Film Thickness and Final Inspection

Sl. No.	Checking Point at Stage	Inspection Basis	Remarks
1	Drying Condition for Paint Film	Not to show push-up painted film	As per Paint Specification
2	Damaged areas and touch-up Condition	All of damaged areas must be repaired No specified DFT for touch up are must be repaired as per paint specification	
3	Sagging, Pinhole, and Exceeding DFT	Not to find sagging, pinhole (however, sagging of various hole, are not repaired with Paint Maker's recommendation when builder is stripe coated for the edge. Exceeding DFT than Paint Maker's recommendations repaired with sand papering	
4	Cleaning Condition	Not to find 'foot-mark' and foreign matters of painted film To be clean condition thoroughly	
5	Stripe Coat Condition for the edge of various hole, access hole, outfits etc.	To make specified DFT for possible measuring	
6	Dry Film Thickness	As per toe drawing of Paint Specification	

However, as a guide, broad recommendations are given in the following **Table K.11** in accordance with **MORTH – 1900**, for various types of coatings in various environmental conditions which should be complied with approximate life to first maintenance is also indicated and can be used as a guide.

Table K.11 Recommendations for Types of Protective Coatings

Sl. No.	System	Environment
1	Wire brush to remove loose rust and scale; 2 coats drying oil type primer; one under coat alkyd type paint; 1 finishing coat alkyd type. Total dry film thickness = 150 µm	Suitable mild condition where appearance is of some importance and where regular maintenance is intended. This system may deteriorate to a marked extent if it is exposed to moderate aggressive atmospheric conditions for lengthy period
2	Wire brush to remove loose rust and scale; 2 coats drying oil type primer; 2 under coats Micaceous Iron Oxide (MIO) pigmented phenolic modified drying oil. Total dry film thickness = 170 µm	Suitable to (1) but where appearances is not very important provide longer life in mild condition. Will provide up to 5 years life to first maintenance is polluted inland environment
3	Blast clean surface; 2 coats of quick drying primer; undercoat alkyd type paint; 1 finishing coat alkyd type. Total dry film thickness = 130-150 µm	Compare to (1), this would provide a longer life in mild conditions and could be used in less mild situation e. g. Inland polluted, where maintenance could easily be carried out at regular intervals
4	Blast clean surface; 2 coats of drying type oil type primer; one undercoat micaceous iron oxide pigmented drying oil type paint. Total dry film thickness = 165-190 µm	Suitable for general steel work exposed to ordinary polluted inland environments where appearance is not of primary importance
5	Blast clean surface; 2 coats of metallic lead pigmented chlorinated rubber primer; one undercoat of high build chlorinated rubber; 1 finishing coat of chlorinated rubber. Total dry film thickness = 200 µm	Suitable for structure in reasonably aggressive conditions e.g. near the coast. Will provide long term protection than (4) in non-coastal situation. Also, suitable for aggressive interior situations such as industrial areas
6	Blast clean surface; total thickness 350-450 µm. Coal tar epoxy	Suitable for sea water splash zones or for conditions of occurrence of frequent salt sprays
7	Pickle; hot dip galvanized (zinc). Total dry film thickness = 85 µm	Suitable for structure in reasonably in mild conditions. Life of 15-20 years before first maintenance could be expected in many situations
8	Grit blast; hot dip galvanized (zinc). Total dry film thickness = 140 µm	Provides a longer life than (7) because thick zinc coating
9	Grit blast; 1 coat of sprayed zinc / aluminium followed by a suitable sealer. Total dry film thickness = 150 µm.	Expected to provide long time protection approximately 15-20 years in aggressive atmosphere

Health Hazards and Environmental Restrictions: Health hazards associated with pollution of the atmospheric environment have to be taken into account during surface preparation and the application of protective coatings. Unless necessary precautions are taken and any limitations on

taken and any limitations on the Contractor's method of working are observed, people may be adversely affected, also the site ground area and waterways may become contaminated to an unacceptable extent. In the workshop the avoidance of hazards arising from blast cleaning steel with abrasives is usually a matter of protection against dust. The precautions to be taken during the application of protective coatings are usually stated by the suppliers, e.g. ventilation to remove strong solvent vapor. On site, in the case of blast cleaning with non-metallic abrasives, particularly if large surface areas are involved, plans should be discussed with the Engineer / Safety Executive and other interested parties and clearance obtained in writing for the proposals. The debris produced by blast cleaning should be contained.

On site also, although operators can usually be protected from the effects of spray application, it may be necessary in some cases to protect the immediate environment from overspray; it may even be expedient to specify brush application only. If as a result of investigation, it is clear that encapsulation and close boarded scaffolding is required to reduce or prevent dust and debris being released into the atmosphere or from falling.

APPENDIX – L
(Refer Clause 3.2.2)

LIFTING TOOLS, TACKLES & SUGGESTED METHODS

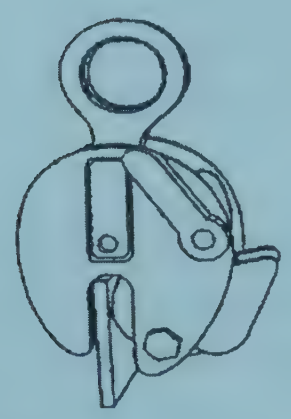

Vertical Type Plate Clamp

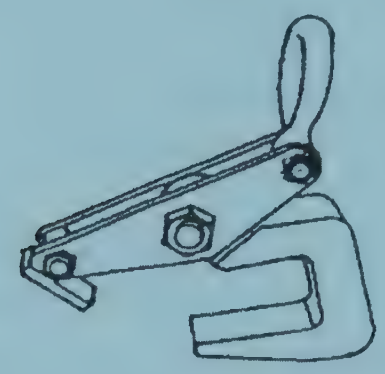

Horizontal Type Plate Clamp

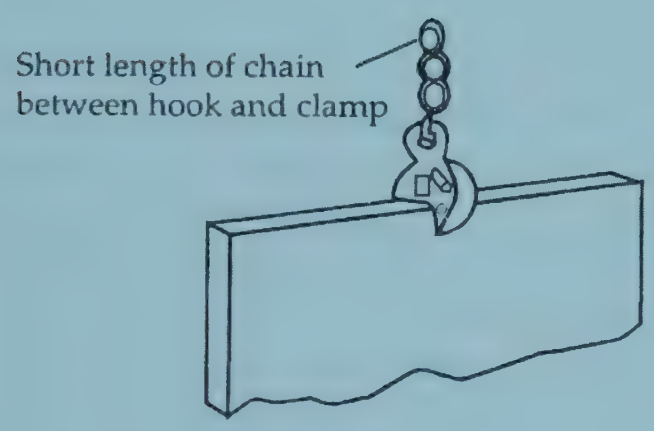

Fig. L-1 Clamp with Short Chain Length

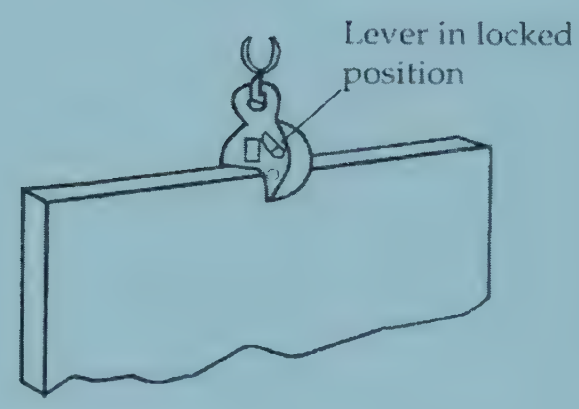

Fig. L-2 Clamp Lever in Locked Position

When two clamps are used to raise or lower a plate by gripping one edge the clamp should be applied so that the centerlines are in line with the respective sling legs.

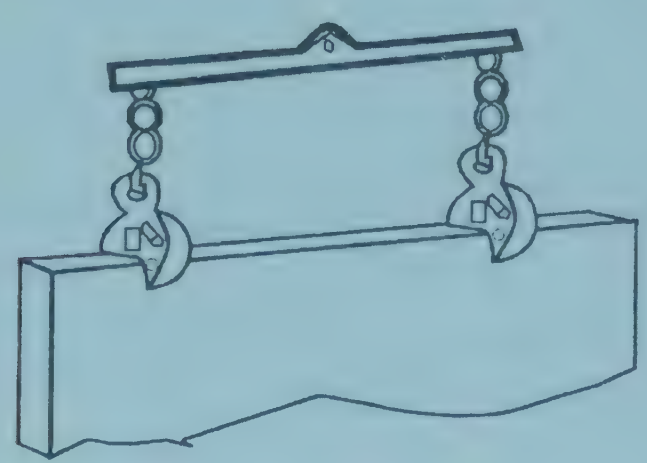

Fig. L-3

Eye Bolts for Lifting

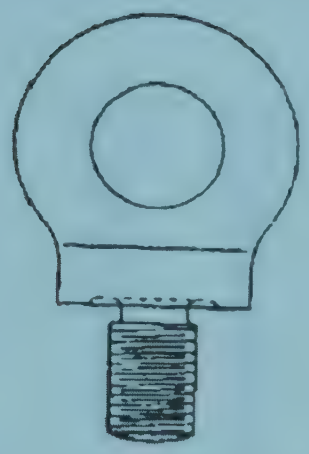

Fig. L-4 Collar Eyebolt

Fig. L-5 Collar Eyebolt

Collar Eyebolt

It is designed to lift to its rated working load limit in the vertical plane only, but will accept, but will accept an overcounted lift at a reduced SWL. Collar eye blots are normally used for permanent attachment to heavy equipment and are usually fitted in pairs.

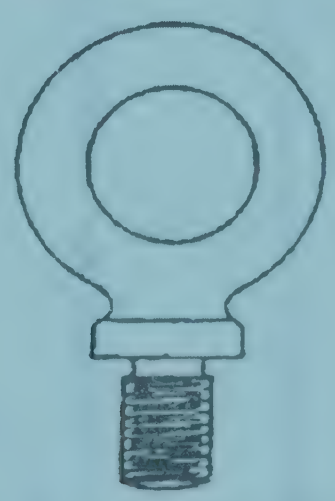

Fig. L-6 Eyebolt with Link

The link is an integral part of the eyebolt and is large enough to accept a hook. This type is regarded as general purpose eyebolts and are used in preference to the collar bolts whenever the lifting axis cannot be confined to the vertical plane.

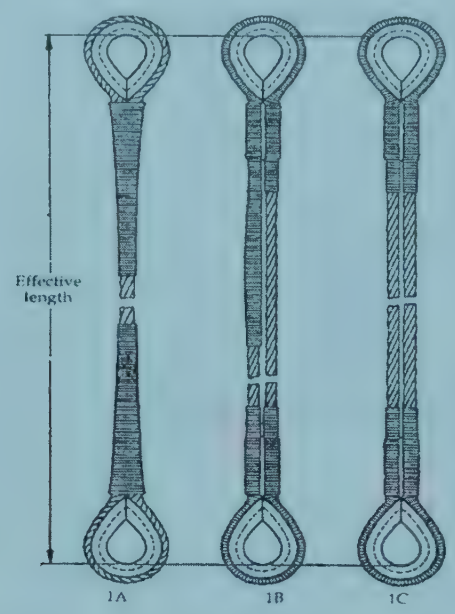

Fig. L-7 Dynamo Eyebolt

Dynamo Eyebolts

Eyebolt of this type is designed for vertical lifting only & must not be used for off-centre lift. The eye of the Dynamo should be large enough to allow direct entry of hook. It should be ensure that the lifting device is directly above the eyebolt before rising the load & avoid pushing of pulling the load into position since this load into position since this may produce an off-centre lift.

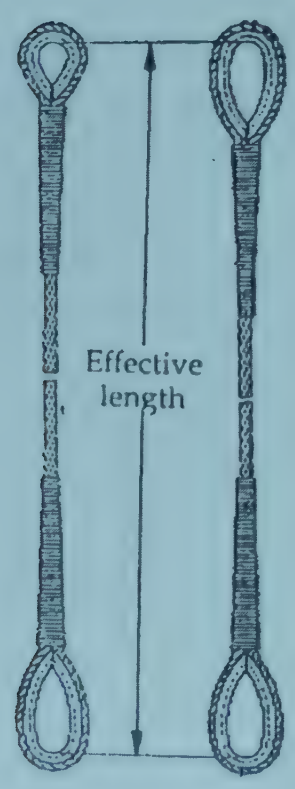

One Leg wire rope slings with ordinary thimble at one end & reeving thimbles at both ends

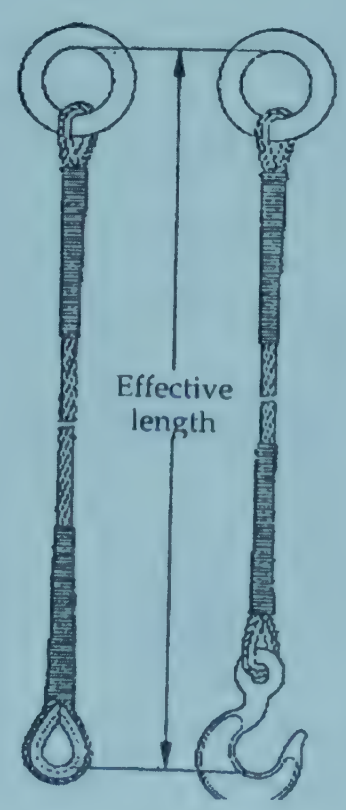

One Leg wire rope slings with ring, ordinary thimble & hook

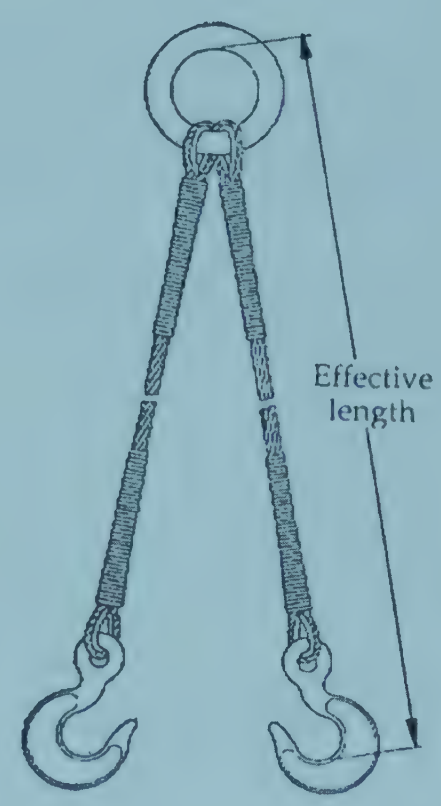

Two Leg wire rope slings with ring at one end hooks at other end

Fig. L-8

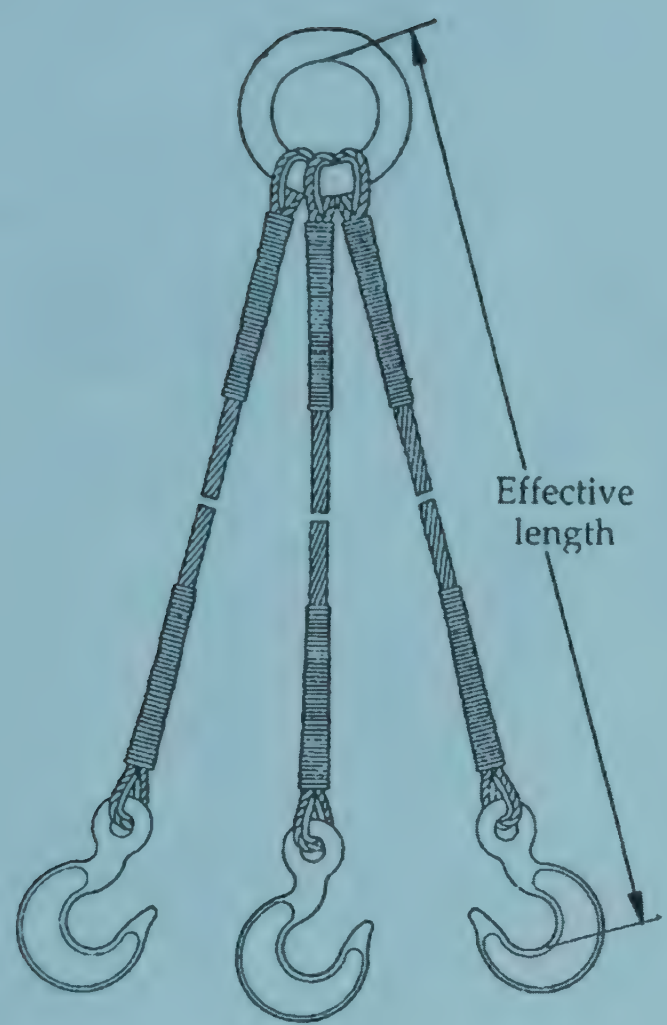

a.Three-leg Wire rope Sling with Main ring one end, hooks at other end

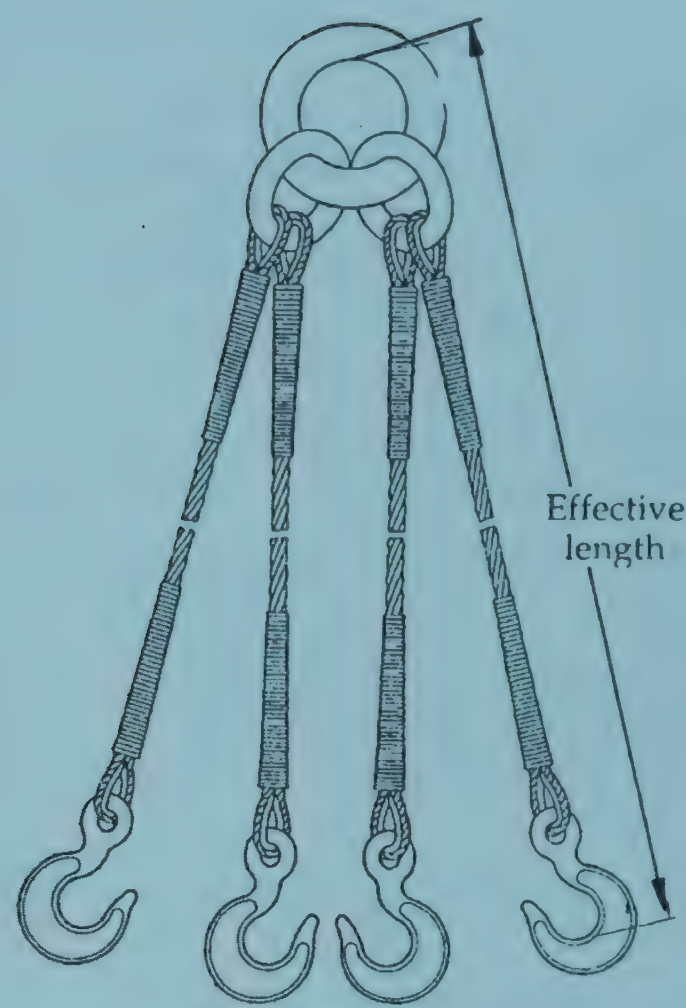

b. Four-leg wire rope sling with main and intermediate rings at one end, hooks at other end

Fig. L-9 Three and Four Leg Wire Rope Slings

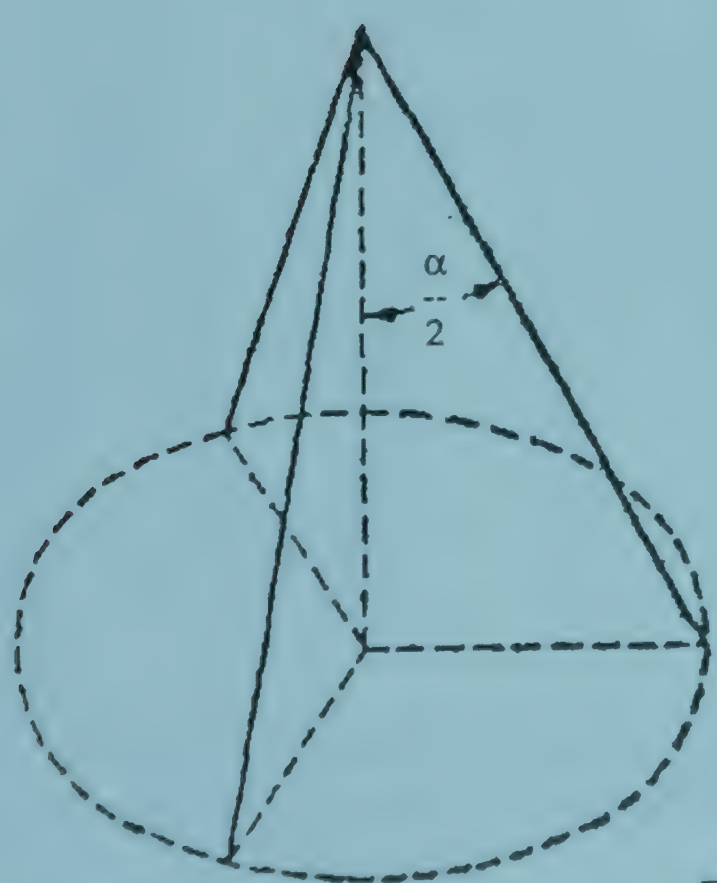

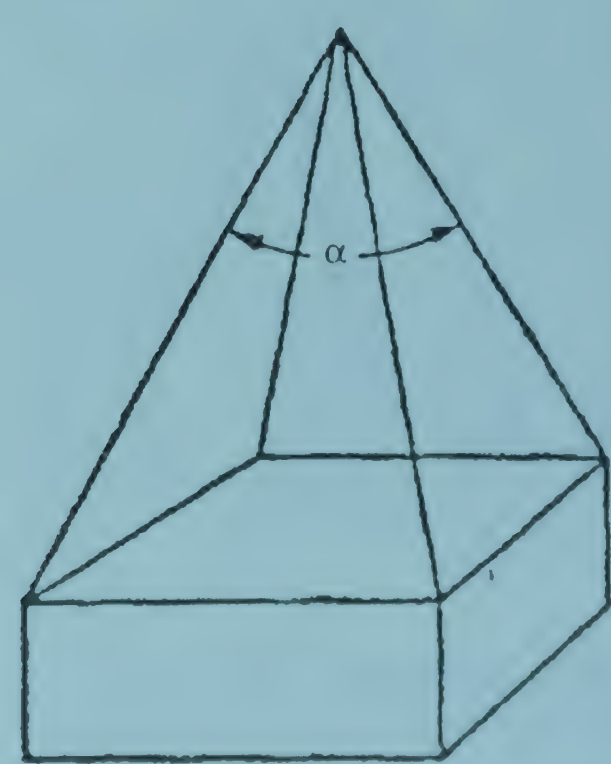

Fig. L-10

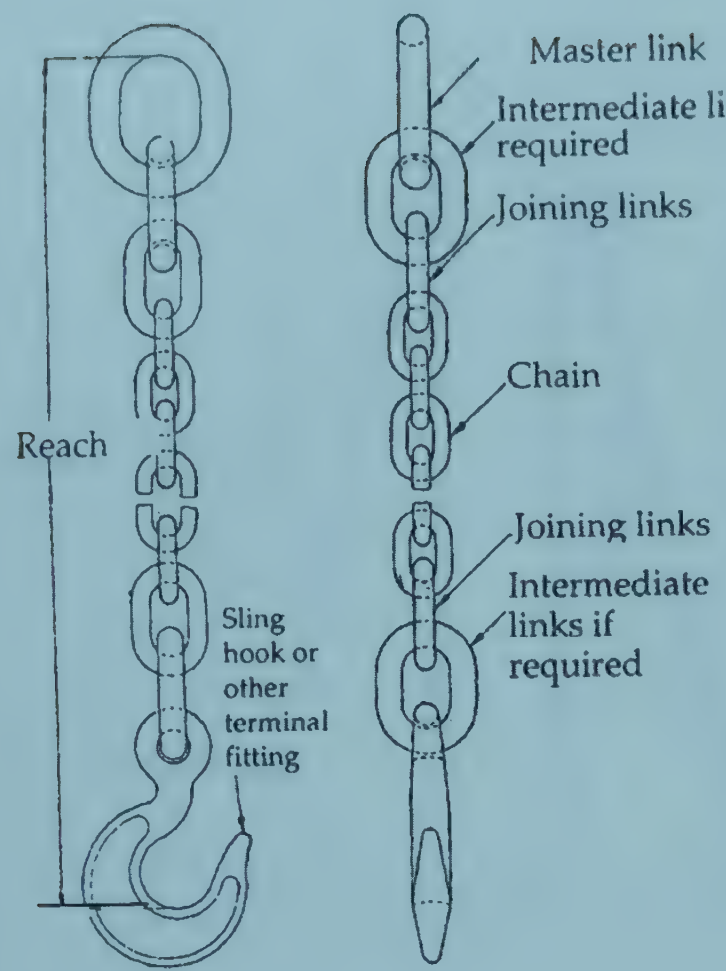

Fig. L-11 Single Leg Slings

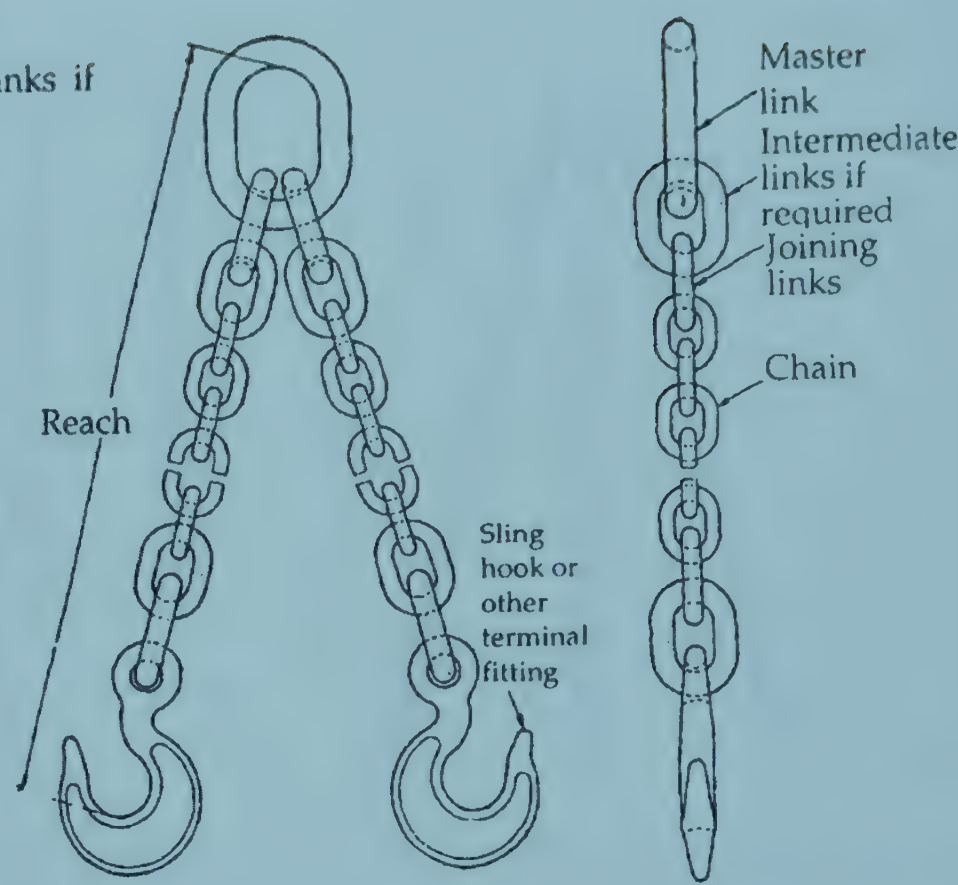

Fig. L-12 Two Leg Sling

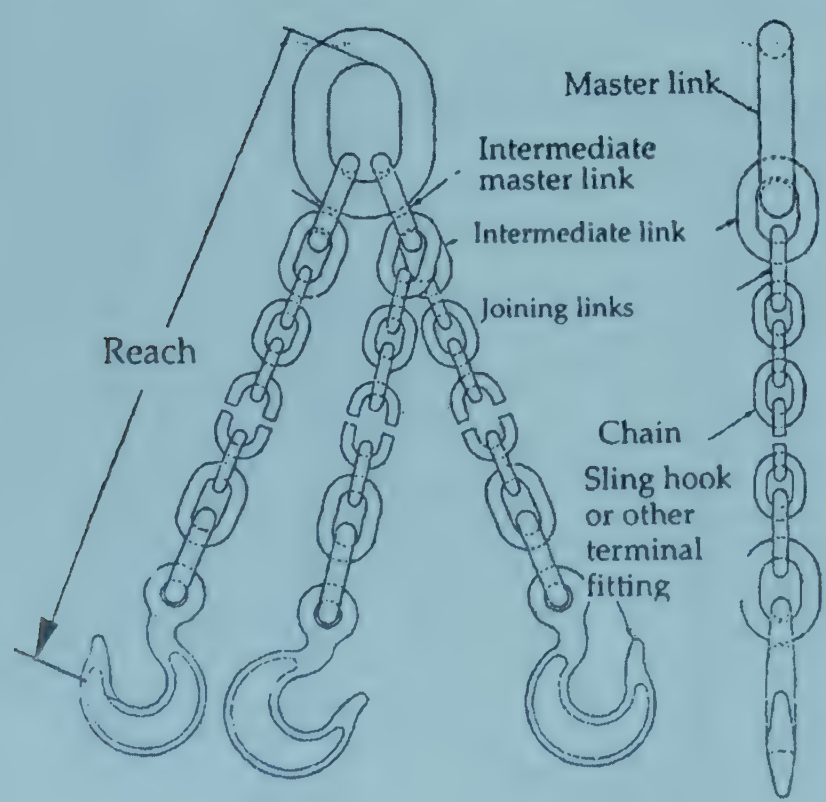

Three Leg wire rope sling with main ring at one end, hooks at other end

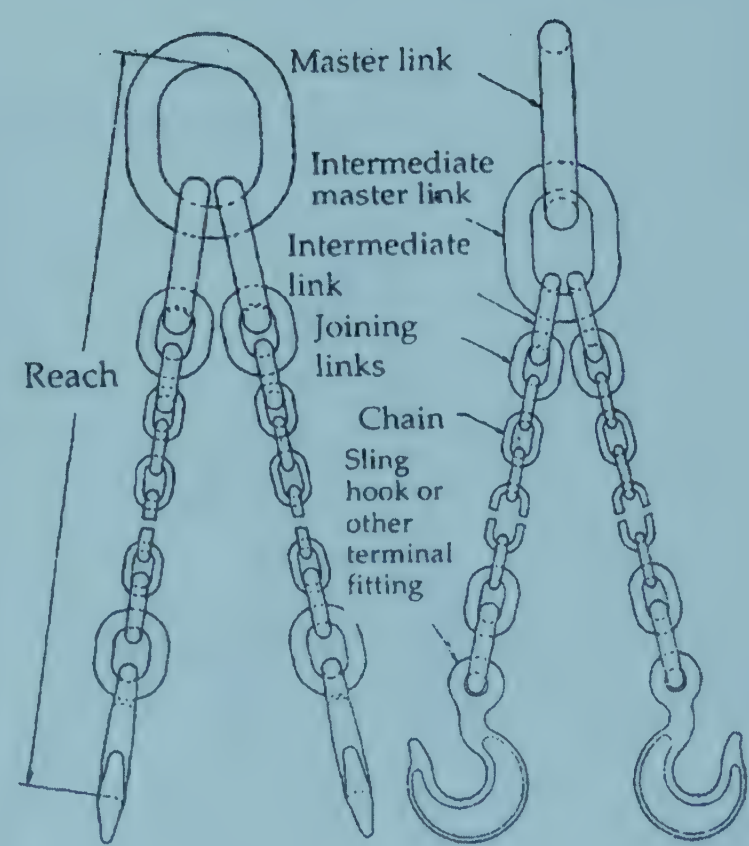

Four -leg wire rope sling with main and intermediate rings at one end, hooks at other end

Fig. L-13

Sl. no.	Condition	Desirable/Undesirable	Reasons
1.	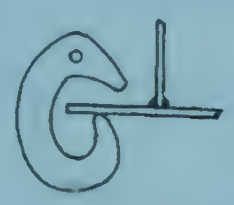	×	Never carry material on the point of hook
2.	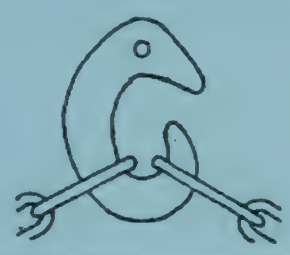	×	Carrying load in this manner will cause the hook to stretch and break
3.		√	Load is supported in the saddle or seat of the hook
4.		×	Never leave unwanted slings hanging from the hook. Only the sling is use must be on the hook
5.		×	The ring of the sling and point of the hook may be damaged because the lifting ring is too small
6.		√	Use shackle to connect the eye of separate slings before placing the hook

Sl. no.	Condition	Desirable/Undesirable	Reasons
7.		×	Placing the pin of the shackle against a moving surface should be avoided
8.	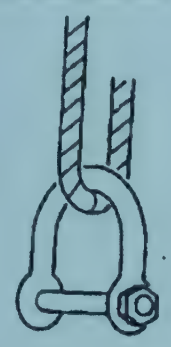	×	Avoid passing a rope around a shackle in this way because of the crushing effect on the rope strands due to very tight radius
9.	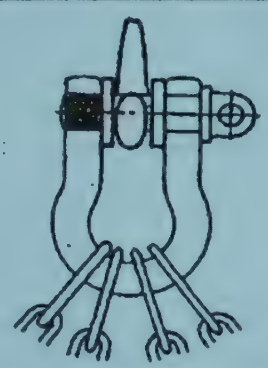	√	Proper gathering the eyes of a double or multiple leg sling in a shackle before placing it on a crane hook
10.	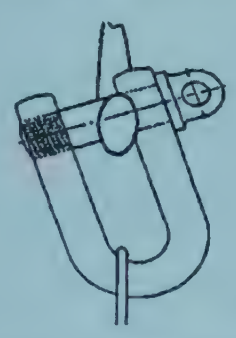	×	Always avoid eccentric loading of the shackle.
11.		√	Proper way of lifting by placing spacers in the gaps between hook and shackle

APPENDIX – M
(Refer Clause 2.2.2)

UTILIZATION OF CRANES AND SAFETY

The following knowledge of cranes will be of help in fabrication and erection of steel bridges:

M.1 Basic Types & Configuration: Within broad category of mobile cranes there have evolved the following basic types and configurations:

Lorry Loaders
Industrial Yard Cranes
Truck Mounted Lattice Boom Crane
Crawler Mounted Lattice Boom Crane
Truck Mounted Telescopic Boom Crane
Rough Terrain Cranes
Mobile Tower Cranes
Heavy Lift Mobile cranes

M.2 Basic Operational Characteristics: There are many types of design to satisfy both the general needs of construction and industrial operations. However the basic operational characteristics of all mobile cranes are essentially the same. They include:

Adjustable boom length
Adjustable boom angle
Ability to lift and lower loads
Ability to slew loads
Ability to travel about the job site under their own power

M.3 Principles of Operation: The crane manual should be strictly followed and referred for Load vs operating radius chart and Do's & Dont's for Safe operation of the crane.

There are four quadrants of operation. The forward quadrant of 90° degrees is made up of 45° spread on either side of the centre line of the crane in the forward direction. Similarly the backward quadrant on the backward direction. The remaining two quadrants will be side quadrants. As far as the stability is concerned, the safety of the crane is comparatively more while the boom is operating in the forward quadrant i.e. over the front compared to those operating in other quadrants like over the back or over the side.

The pressure acting on the ground below the crane due to the reaction from the crane is never uniform. Generally it is tapered and increasing towards the tipping point. Before lifting is started the ground is to be judged for its capacity to provide the required reaction. Most of the time the ground is reinforced with wooden sleepers, steel sections etc. The force from the outrigger pads are to be passed to the ground through appropriately arranged grillage.

Special care should be taken while operating the crane on freshly filled and or not properly compacted soil. Also, care must be taken while working on embankment particularly near the slopes as machine weight and vibrations can cause them to collapse. Stability failures are foreseeable.

Structural failure often occurs before stability failure If load is added beyond its rated capacity the crane fails structurally before there is any sign of tipping. Structural failure includes all permanent damages such as overstressing, bending and twisting of any of the components of the crane. When the crane is overstressed the damage is not usually apparent. Nevertheless, a structural failure might have occurred. The overstressed component is liable to have a catastrophic failure at some future time. So care should be taken to avoid the overloading of the crane.

M.4 Assembly, Disassembly & Transportation of Crane and it's Components: While transporting the crane, care should be taken to arrest the movement of the swinging parts attaching slings to the main chord should be avoided and the fittings at the ends of the main chords should be used. Synthetic web slings should be used preferably and, if wire ropes are used, the boom sections should be padded well to prevent damage. The boom sections should be suitably blocked while loading on to trucks. Chain binders should be avoided, as they may damage or bend the boom.

For assembly of booms, the manufacturer's procedure and the instructions should be followed, assembly of the crane should be done on a level area and should be done in such a way that the boom is in the quadrant of maximum stability. All outrigger beams should be fully extend laterally and outrigger's lifting cylinders should lift the wheels off the ground and level the carrier.

The amount of counterweight required should be checked from the crane manual for the maximum value of the load that will be lifted and the length of boom that will be installed. The swing lock should be set when the assembly is being done. No attempt should be made to raise the boom, while assembly, until all boom insert connection pins (splicing bolts) are installed. Wind velocity should be checked before lifting the boom off the ground.

M.5 Signaling: The signal men must be used when the operator is not in a position to see the load and its movement. Hand signals can be used when the distance between the operator and the signalman is not more and conditions allow for clear visibility. Standard hand signaling should be adopted. It is always preferable to use walkie- talkie.

M.6 Multiple Crane Lifts: A multiple crane lift should be meticulously planned and every eventuality taken into consideration. Lift must be planned and carried out under qualified supervisors. For a multiple crane lift, no crane should be loaded to 75% of its net capacity. The lift, swing and boom speeds of both the cranes should be matched. Wherever possible the cranes should not travel with load. Sufficient communication should be ensured (preferably by walkie-talkie) amongst the supervisor and crane operators. Supervisor should be positioned to view the total operation and be able to communicate with both the operators. The movement of the load should be jerk free and smooth. Use of equalizer beam is preferable.

M.7 Working near an Electric Line: If power line exists in the erection area, the electric department should be intimated in advance regarding the time and place of crane use. The limit of operating distance should be above 6 m from 33 KVA live line. Dry polypropylene ropes should be used for tag line. All safety precautions shall be ensured to avoid electrocution

M.8 Load Charts: Load chart of the crane shall be referred to for assessing the lifting capacity of the crane at the required radius and height of erection. Engineers should adjust the lifting Capacity of the crane basing on the machine condition, crane type, wind speeds and other site conditions.

M.9 Wire Ropes: All wire ropes should be thoroughly inspected before use and inspection of all ropes must be made at regular intervals. A rope which has not been used for a long period should be given a thorough inspection before it is put back into service, after proper lubrication. Wire ropes shall be inspected for kinks, wear, fatigue, abrasion and corrosion Ropes, having six or more randomly distributed broken wires in one rope lay, three or more broken wires in one strand in one rope lay or having more than one broken wire near an attached fitting should not be used.

In running ropes if there is any evidence of wire breaks in the valleys between strands in one rope lay or having wear exceeding ⅓ of the diameter of the individual wires should not be used.

All ropes having signs of severe stretch, having noticeable corrosion in the vicinity of fittings, having Crushed, Flattened or Jammed Strands should be replaced. The replacement of rope for all the above conditions should be made to correct specification.

APPENDIX – N
(Refer Clause 3.2.4)

ERECTION INSPECTION CHECKLIST

Part – 1 (Drawing)

Plan: ☐ To-scale plan of work area showing supporting structures, roads, railroads, waterways, overhead and underground utilities, adjacent structures, etc., and framing plant with member shipping marks (match those used on shop drawings) & field splice locations if applicable.

☐ Location of temporary supports, false work, holding cranes.

☐ Location of crane positions on plan showing pick radii.

☐ Elevation view of crane & members ☐ Included ☐ Not Applicable.
Crane Support Method: barrages, mats ☐ Included ☐ Not Applicable.

☐ Member delivery location & Orientation.

Details: ☐ Details & arrangement of member rigging, show sizes, capacities, and location of centre of gravity of each pick.

☐ False work and temporary support details show sizes and capacities.

☐ Crane capacity chart indicating crane type, lifting capacity at given radius and orientation, counterweight requirements and boom length.

☐ Pick weight chart indicating weight of member, plus rigging and any attachments.

☐ Written procedure indicating erection sequence for primary and secondary members (cross frames, diaphragms, etc.) including the following, method of tie down of individual pieces, time and method of connections of diaphragms, lateral bracing, and field splices.

Part – 2 (Calculations)

☐ Calculations for load capacity and stability of temporary supports for structure (false work, tie downs, lifting beams, spread beams etc.,).

☐ Calculations indicating capacity of temporary crane supports ☐ Included ☐ Not Applicable.

☐ Calculations to substantiate structural integrity and stability of members prior to completion of bridge assembly.

- Calculations indicating structural integrity of any partially bolted primary splice after release of external support system.

- Calculations to substantiate structural integrity of abutments and retaining walls affected by surcharge from crane.

Erection Inspection Checklist

Part – 1 (Pre-Erection)

- **Erection Procedure – Approved**

- Site Preparation – access road, crane pads, bearing pedestals, finish and elevation, anchor bolts survey, falsework foundation pads, all obstacles noted.

- **Personnel**
  Foreman – Competent Person.
  Crane Operators – Qualified, Licensed, Trained, Medical.
  Welders – Certification current, Qualified for positions.
  Any required training and instruction complete.

- **Lifting Equipment.**
  Crane Inspection – current, schedule during project.
  Lifting devices and rigging certification inspection.

- **Bolted Connections.**
  Check bolt quality, size & lengths, certifications,
  Installation procedure, method of tensioning.
  Impact wrenches – conditions, proper size and capacity
  Torque wrenches – calibration

- **Welded Connections.**
  Weld Procedure Specifications (WPS) approved.
  Welding Equipment – Sufficient capacity, grounding.
  Welding Consumables – Proper storage, drying ovens

- Safety/Fall Protection – nets, lifeline lanyards, platforms, scaffolds, man lifts, floats, emergency boat.

- Co-ordination Items – Rail Roads local agencies, Emergency service etc.,

Erection Inspection Checklist

Part – 1 (Inspector Responsibility)

- ☐ Check all Personnel Certifications – Crane Operator, Welders etc.,
- ☐ Check all Equipment Certifications – Crane etc.,
- ☐ Check all Protection – Requirements, Installation.
- ☐ Check Crane Radii.
- ☐ Check Temporary Supports – Installed per Erection Procedure.
- ☐ Check Assembly marks – Proper Location & Orientation.
- ☐ Check minimum number of Bolts & Pins Installed before release of Crane/Temporary supports.
- ☐ Monitor Bolt Installation Procedure.
- ☐ Check field weld size/geometry, consumables, and variables per WPS and NDT results.
- ☐ Check Bearing alignment/adjustment.

Part – 2 (Erector Responsibility)

- ☐ **Provide for Inspector – Prior to Erection**
  Framing Plan, Erection Procedure.
  Crane Operators Qualifications,
  Welder Certifications.
  Crane Inspection Certifications.
  Bolt manufacture certifications.
  Weld Procedure Specifications.

- ☐ **Provide for Inspector – during Erection.**
  Access to work – ladders, man lift, scaffold, or platform.
  Torque Wrench.
  Temperature Indication Crayons.

Part – 3 (Associate Data)

- Manufacturer's cut sheets for rigging devices (beam clamps, slings, wire rope, shackles, turnbuckles, chains, straps, etc.,) and pre-engineered flasework, if applicable.

- Statement as to status of co-ordination with parallel entities requiring review Railways, Irrigation State PWD, Electricity Board, Public Health Services etc.

Acknowledgements

i) RDSO	IRS B1-2001, Indian Railway Standard Specification for Fabrication and Erection of Steel Girder Bridges locomotive Turn Table.
ii) RDSO	RDSO Report BS-III (Guideline for use of HSFG Bolts on Bridges).
iii) INSDAG	Guide Book for Fabrication and Erection of Steel Structure.
iv) AASHTO/NSBA Steel Bridge Collaboration	Steel Bridge Erection guide specification
v) AASHTO/NSBA Steel Bridge Collaboration	Steel Bridge Erection guide specification.
vi) Specification for Highway Works, Amendment August-2014, Series NG-1900	Protection on Steel against Corrosion
vii) MORTH -1900-2015	

(The Official amendments to this document would be published by the IRC in its periodical, 'Indian Highways' which shall be considered as effective and as part of the Code/Guidelines/ Manual etc. from the date specified therein)

Price: ₹800/-
(Plus Packing & Postage)